WWW.ANTOINE-BELGIUM.COM

Antoine©

2023-2024

EQUIPMENT FOR DISPENSING AND REFRIGERATING BEER

MADE IN BELGIUM

Antoine

MADE IN BELGIUM

Rue de la Bienvenue, 7-9, 1070 Bruxelles
Verwelkomingsstraat 7-9, 1070 Brussel
T +32 2 523 94 30
info@antoinebelgium.be
www.antoine-belgium.com

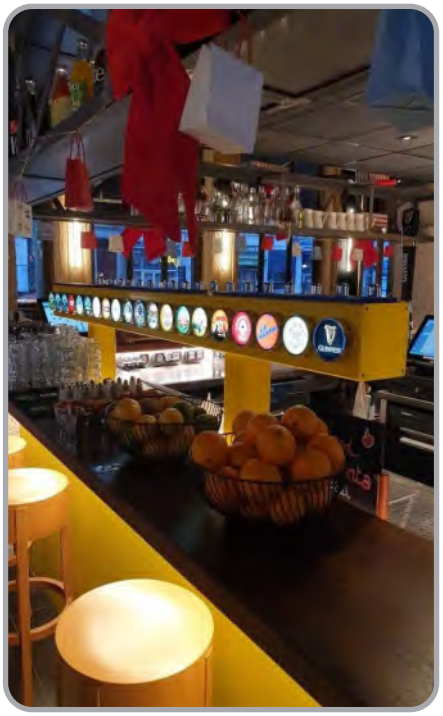

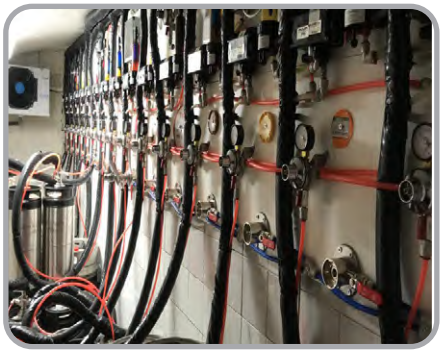

15 000m² of production

Green Production

Antoine

Since 1932

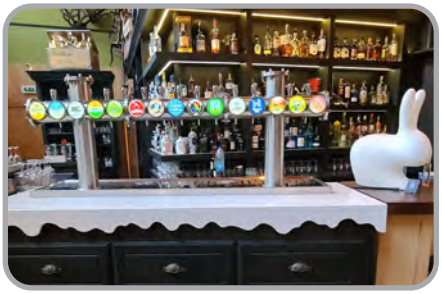

From father to son
SInce 1932

Come discover our creations on :

WWW.ANTOINE-BELGIUM.COM

Antoine
TRIPLE
MADE IN
Belgium
Antoine
LAGER
MADE IN
Belgium

Enjoy the original tap

Dispensing towers
Advertising - Taps 4-46

Drainers, driptrays & Sinks
Counter accessories 47-49

Coolers
beer-cooler - keg-cooler-bottle-cooler 50-63

Python lines, Cleaning products
Accessories 64-65

Cleaning & coupling heads,
Pressure regulators 66-67

Party-coolers 68-74

Wine Coolers 75

Ice cube machines 76

BEER TOWERS

Sphéro
P. 6

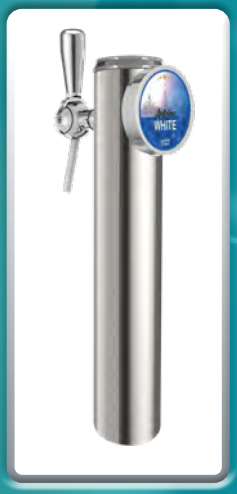

USA
P. 7

Master
P. 8

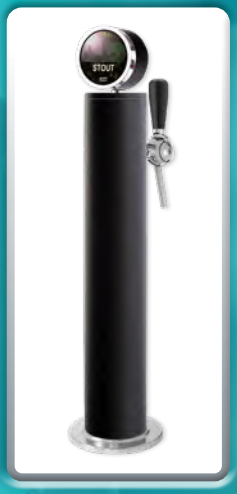

Master Vintage
P. 9

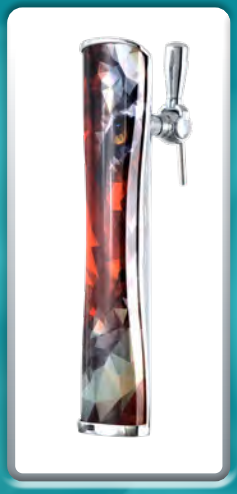

Starled XL
P. 10

Sphéro wood
P.11

Brisbane
P. 12

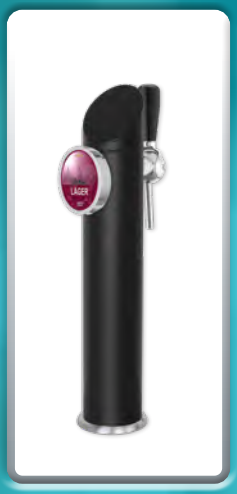

Manhattan
P. 13

Holland
P. 14

Maxima
P. 15

New-Anfo
P. 16

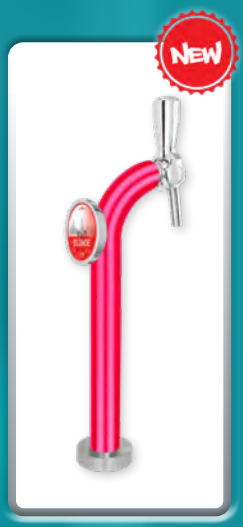

Tropézienne
P. 17

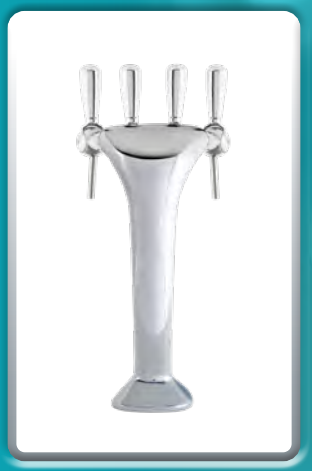

Naja
P. 18

Mercury
P. 19

Dubaï
P. 20

Smoking
P. 21

Dubai-bridge
P. 22-23

Texas
P. 24 - 25

Parisienne
P. 26

Condor black
P. 27

Brussels Black
P. 27

Tropique - Vinci
P. 28

Amazone
P. 29

Sydney
P. 30

Seven
P. 31

Zeta
P. 32

Atlantis
P. 32

Canberra
P. 33

Melbourne
P. 33

Brisbane
P. 34-35

Bi-metal
P. 36

Delta sinceny
P. 37

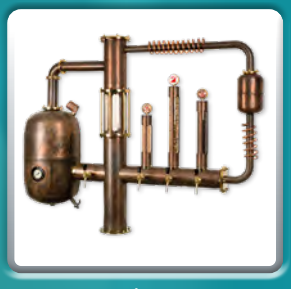

Antique
P. 41

COME DISCOVER OUR PORTOFOLIO ON OUR WEBSITE : WWW.ANTOINE-BELGIUM.COM

SPHÉRO 60

1 tap

Option
Illumination LED
Ø 69 - Ø 82

Refrigerated

FINISHES :

BRUSHED SS

ANTHRACITE
RAL 9004

2 -TONES :
BRUSHED + Gold

2 -TONES :
BRUSHED + Gold

ANTHRACITE
(RAL 9004)

BRUSHED SS

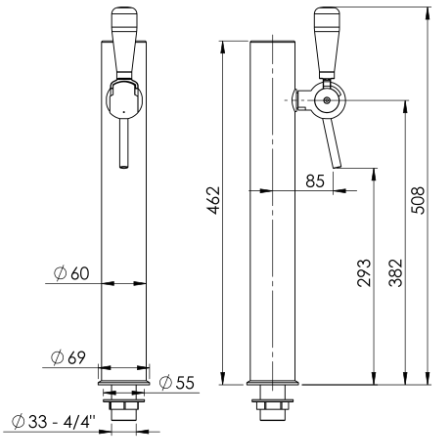

NON-CONTRACTUAL PHOTOS

USA

1 - 2 taps

Option
LED illumination
Ø 69 - Ø 82

Refrigerated

FINISHES :

POLISHED SS

BRUSHED SS

CUSTOM FINISHES :

VARNISHED PAINTS

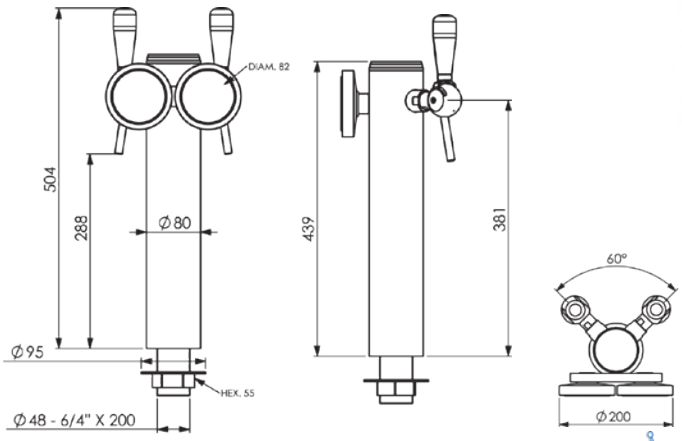

NON-CONTRACTUAL PHOTOS

BEER TOWERS

MASTER

1 tap
2 taps on demand

Option
Illumination LED
Ø 69 - Ø 82

Refrigerated

FINISHES :

BRUSHED SS

ANTHRACITE
RAL 9004

CUSTOM FINISHES :

RUST EFFECT

VARNISHED PAINTS

BRUSHED SS

ANTHRACITE
(RAL 9004)

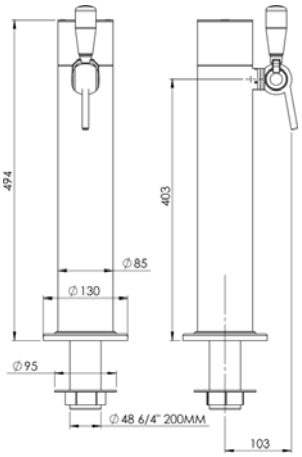

NON-CONTRACTUAL PHOTOS

MASTER VINTAGE

BRUSHED SS

RUST EFFECT

ANTHRACITE
(RAL 9004)

1 tap

Option
LED illumination
Ø 69 - Ø 82

refrigerated

FINISHES :

BRUSHED SS

ANTHRACITE
RAL 9004

CUSTOM FINISHES :

RUST EFFECT

VARNISHED PAINTS

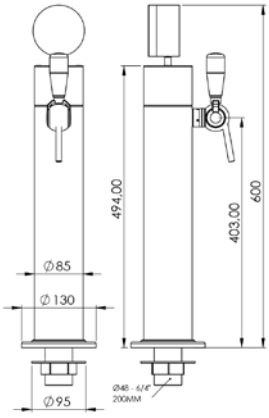

NON-CONTRACTUAL PHOTOS

BEER TOWERS

STARLED XL

1 tap

Chromed

Illumination LED

Refrigerated

Customise your tower
Send us your logo
in Adobe Illustrator format.

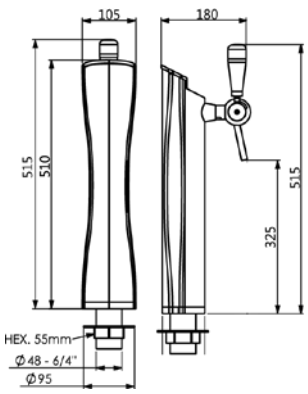

NON-CONTRACTUAL PHOTOS

SPHÉRO WOOD

1 tap

Option
LED illumination
Ø 82

Refrigerated

FINISH :

BRUSHED SS / LIGHT OAK

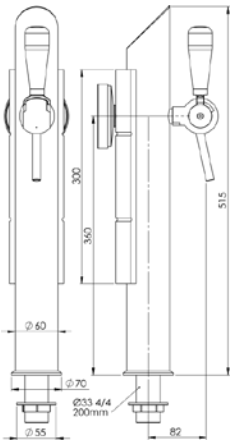

NON-CONTRACTUAL PHOTOS

BEER TOWERS

BRISBANE

1 - 2 taps

Option
Illumination LED
Ø 69 - Ø 82

Refrigerated

FINISHES :

POLISHED SS

CUSTOM FINISHES :

BRUSHED SS

VARNISHED PAINTS

BULLET GREY

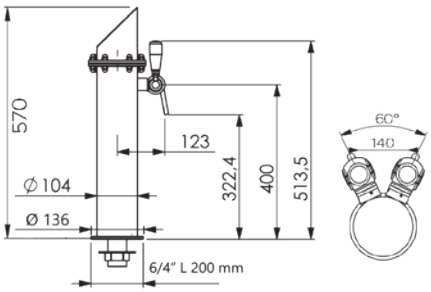

NON-CONTRACTUAL PHOTOS

MANHATTAN

BRUSHED SS

ANTHRACITE
(RAL 9004)

1 - 2 taps

Option
LED illumination
Ø 82

Refrigerated

FINISHES :

BRUSHED SS

ANTHRACITE - RAL 9004

CUSTOM FINISHES :

VARNISHED PAINTS

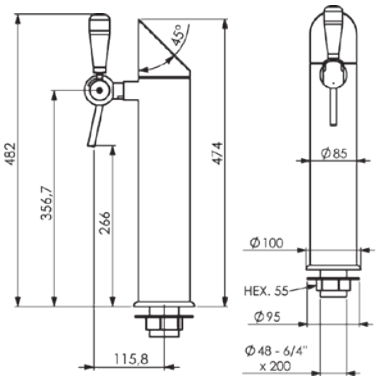

NON-CONTRACTUAL PHOTOS

BEER TOWERS

HOLLANDAISE

1 - 2 taps

Option
Illumination LED
Ø 69 - Ø 82

Refrigerated

FINISHES :

CHROMED BRASS

GOLD PLATED BRASS

CUSTOM FINISHES :

OLD BRONZE

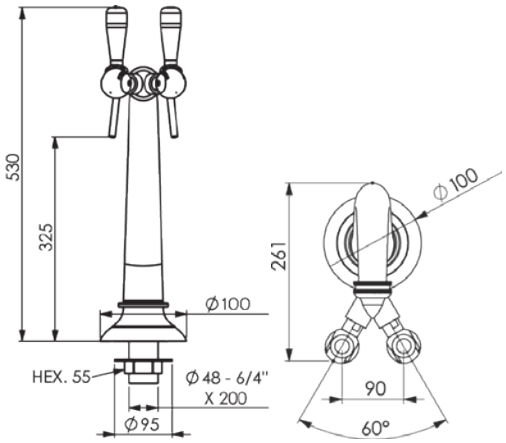

NON-CONTRACTUAL PHOTOS

MAXIMA

1 - 3 taps

Option
LED illumination
Ø 82

Refrigerated

FINISHES :

CHROMED BRASS

GOLD PLATED BRASS

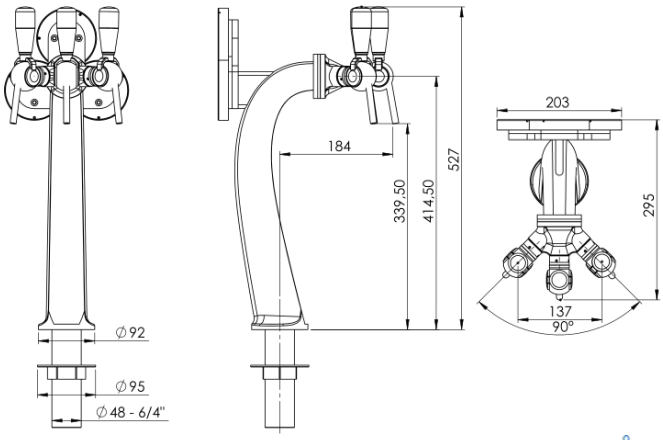

NON-CONTRACTUAL PHOTOS

BEER TOWERS

NEW ANFO

1-2 taps

Option
Illumination LED
Ø 69 - Ø 82

Refrigerated

FINISHES :

CHROMED BRASS

BRASS POLISHED

CUSTOM FINISHES :

ANTHRACITE - RAL 9004

ANTHRACITE
(RAL 9004)

CHROMED
BRASS

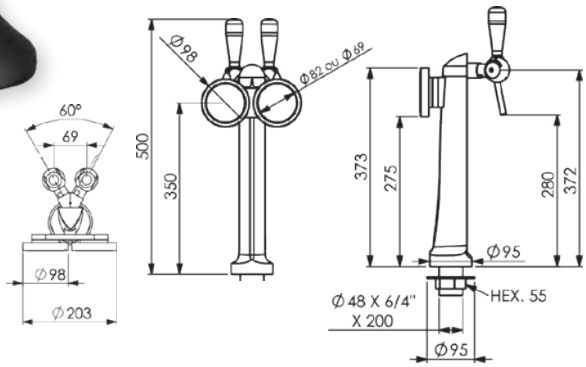

NON-CONTRACTUAL PHOTOS

TROPÉZIENNE

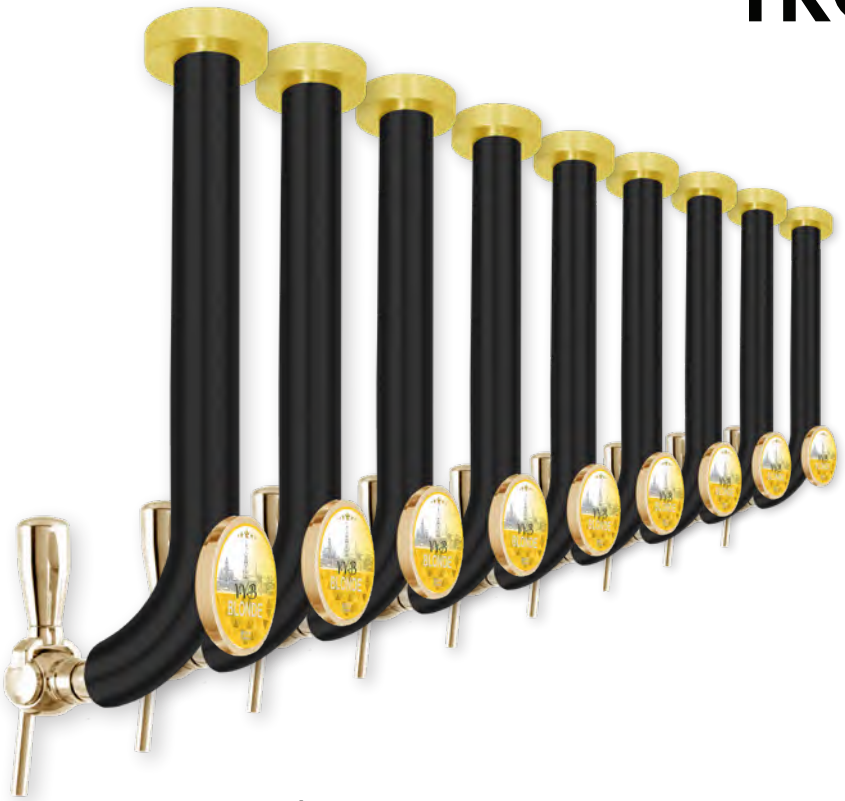

1 tap

Option
LED Illuminated
Ø 82

Refrigerated

FINISHES :

BRUSHED SS

ANTHRACITE - RAL 9004

CUSTOM FINISHES :

VARNISHED PAINTS

"TROPÉZIENNES SKY BAR"

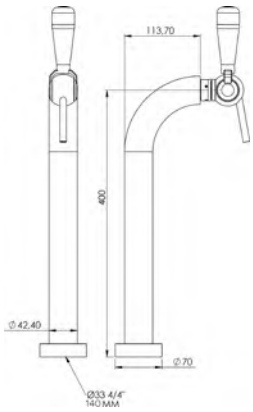

"TROPÉZIENNES RAINBOW"

NON-CONTRACTUAL PHOTOS

NAJA

1 - 4 taps

No Illumination

Refrigerated

FINISHES :

CHROMED BRASS

CUSTOM FINISHES :

ANTHRACITE - RAL 9004

VARNISHED PAINTS

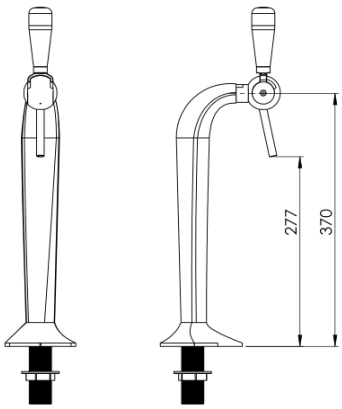

	X
2T	135
3T	220
4T	260

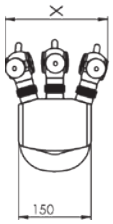

NON-CONTRACTUAL PHOTOS

MERCURY

3 - 7 taps

Option
LED Illuminated
Ø 82

Refrigerated

FINISHES :

CHROMED BRASS / LIGHT OAK

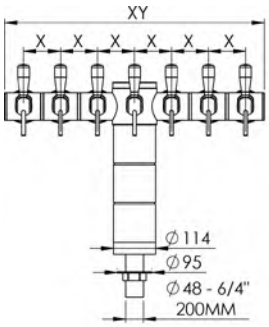

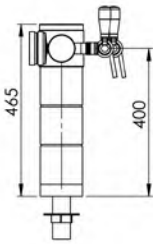

	X	XY	DRAINERS
3T	150	401	500
4 - 5T	100	501	600
6 - 7T	100	702	800

NON-CONTRACTUAL PHOTOS

DUBAÏ

Antoine

1 - 7 taps

Illumination LED
RGB : arm + top

Option
Illumination LED
Ø 69 - Ø 82

Refrigerated

FINISHES :

BRUSHED SS

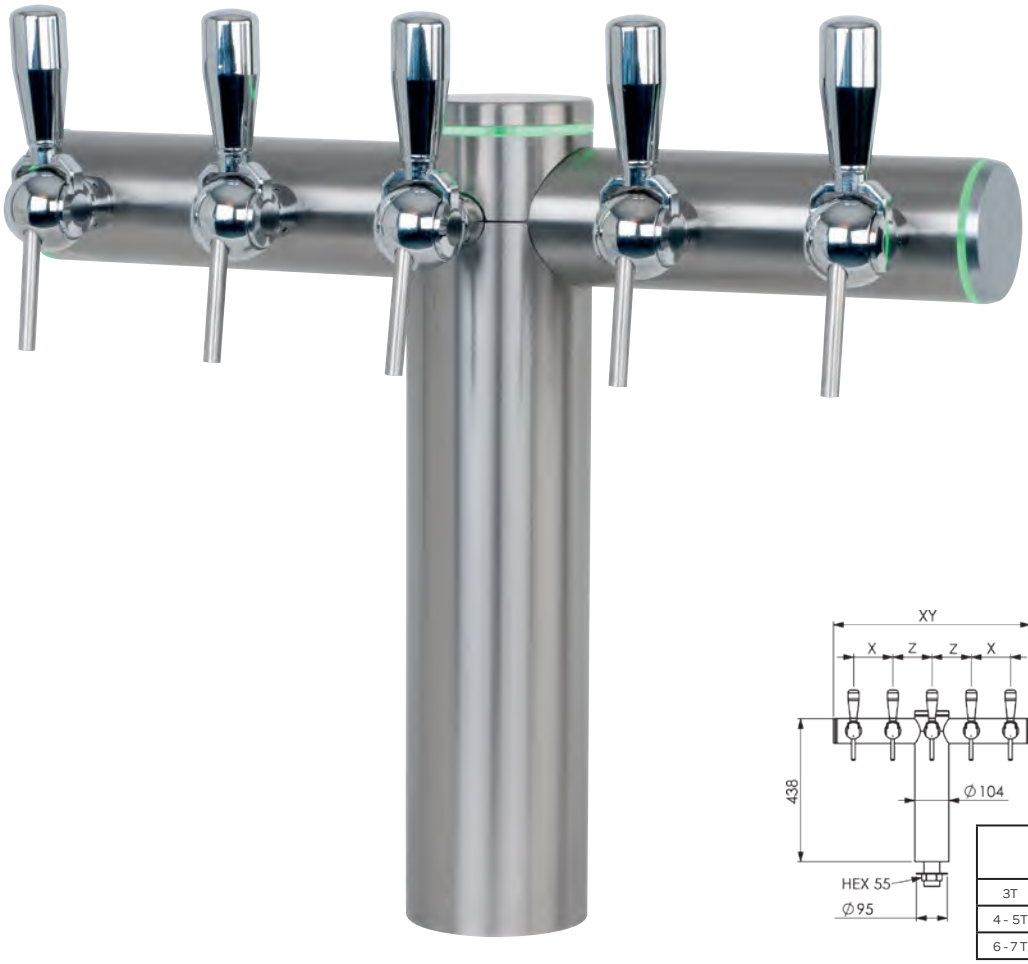

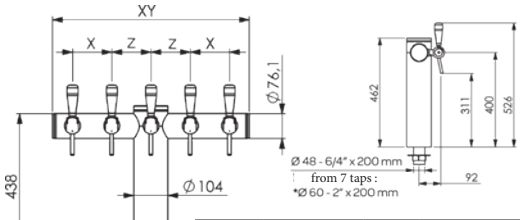

	XY	X	Z	DRAINERS
3T	390		130	400
4 - 5T	602	120	120	700
6 - 7 T	762	110	100	800

Antoine

NON-CONTRACTUAL PHOTOS

SMOKING

3 - 5 taps

Option
LED Illuminated
RGB : arm + top

Option
LED Illuminated
Ø 69 - Ø 82

Refrigerated

FINISHES :

ANTHRACITE - RAL 9004

CUSTOM FINISHES :

VARNISHED PAINTS

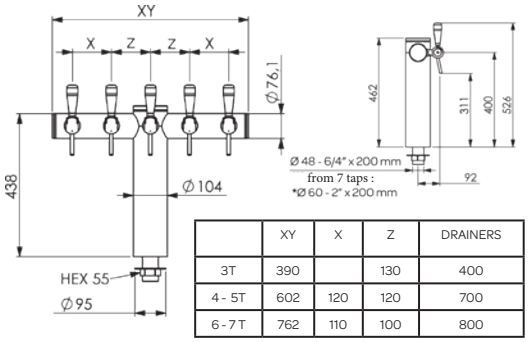

	XY	X	Z	DRAINERS
3T	390		130	400
4 - 5T	602	120	120	700
6 - 7 T	762	110	100	800

NON-CONTRACTUAL PHOTOS

DUBAÏ BRIDGE

8 - 10 taps

Option
Illumination LED
RGB : bras + top

Option
Illumination LED
Ø 69 - Ø 82

Refrigerated

FINISHES :

BRUSHED SS

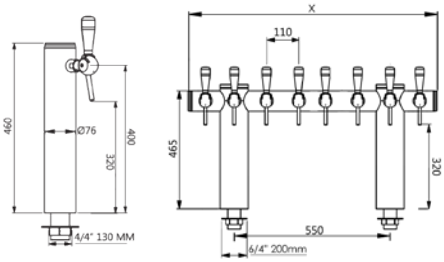

NON-CONTRACTUAL PHOTOS

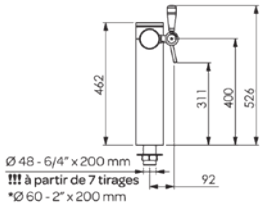

	X	DRAINERS
8T	895	1000
10 T	1115	1200

NON-CONTRACTUAL PHOTOS

TEXAS

3 taps
5 taps

ONLY WITH
Illumination LED
Ø82

Refrigerated

FINISHES :

POLISHED SS

NON-CONTRACTUAL PHOTOS

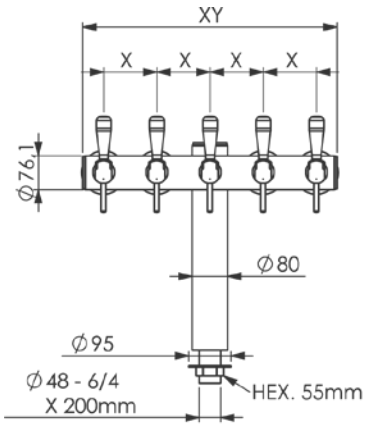

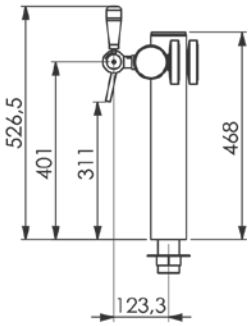

	X	XY	DRAINERS
3T	150	394	500
5T	120	574	600

NON-CONTRACTUAL PHOTOS

PARISIENNE

1 - 7 taps

Option
Illumination LED
Ø 69 - Ø 82

Refrigerated

FINISHES :

CHROMED BRASS

CUSTOM FINISHES :

GOLD PLATED BRASS

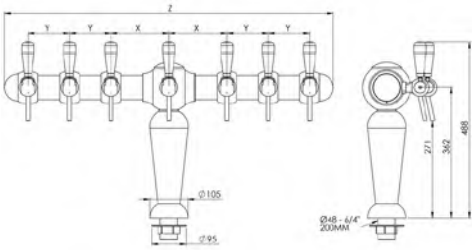

	Z	X	Y	DRAINERS
3T	451	160	115	500
5T	680	160	115	700
7T	910	160	115	1000

NON-CONTRACTUAL PHOTOS

BRUSSELS BLACK

LIMITED STOCK

3 or 5 taps

LED Illuminated
Ø 82

Refrigerated

FINISHES :

ANTHRACITE - RAL 9004

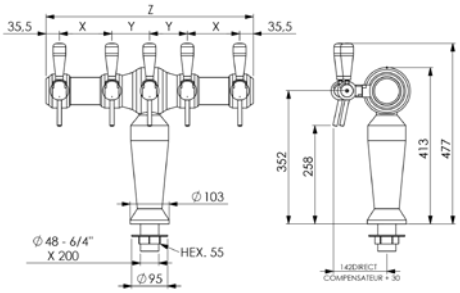

	X	Y	Z	DRAINERS
3T	-	160	391	500
5T	138	100	547	600

CONDOR

BLACK

Limited stock

FINISH :

ANTHRACITE - RAL 9004

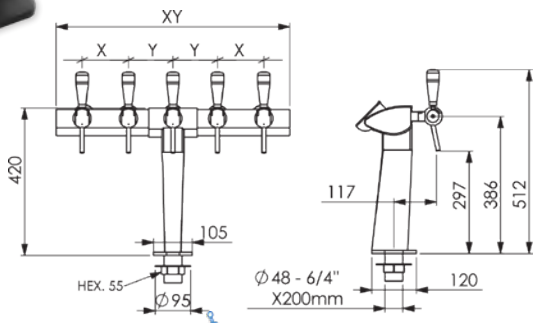

	XY	X	Y	DRAINERS
3T	405		135	500
5T	630	125	120	700

NON-CONTRACTUAL PHOTOS

TROPIQUE

3 - 5 taps

Illumination LED
Ø 82

Refrigerated

FINISHES :

BRUSHED SS / LIGHT OAK

BRUSHED SS / WENGÉ

BRUSHED SS
(VINCI)

VINCI

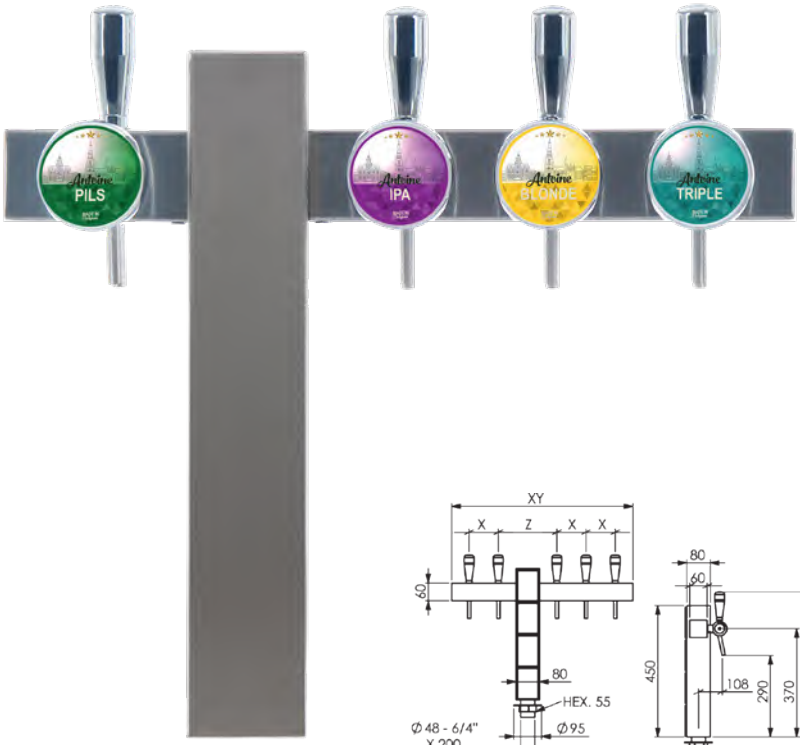

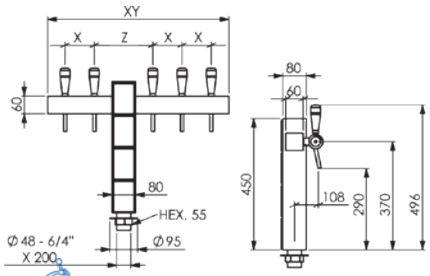

	XY	X	Z	DRAINERS
3T	420		200	600
4T	520		200	700
5T	620	100	200	800

NON-CONTRACTUAL PHOTOS

AMAZONE

6 or 8 taps

LED Illuminated
Ø 82

Refrigerated

FINISHES :

BRUSHED SS / LIGHT OAK

BRUSHED SS / WENGÉ

BRUSHED SS
(VINCI)

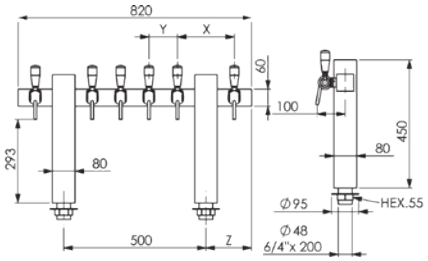

	Y	X	Z	DRAINERS
6T	100	200	160	1000
8T	100	200	260	1200

NON-CONTRACTUAL PHOTOS

SYDNEY

4 - 7 taps

Option
Illumination LED
Ø82 - Ø69

Refrigerated

FINISHES :

POLISHED SS

GOLD PLATED BRASS

ANTHRACITE - RAL 9004

VARNISHED PAINTS

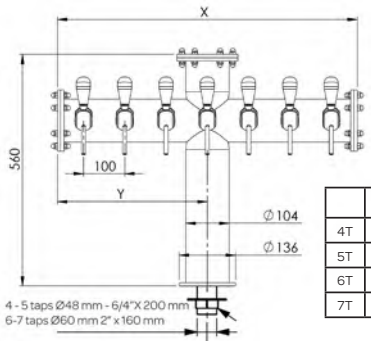

	X	Y	Z	DRAINERS
4T	526	263	200	600
5T	526	263	200	600
6T	726	363	160	800
7T	726	363	160	800

NON-CONTRACTUAL PHOTOS

SEVEN

4 - 6 taps

Option
LED Illuminated
Ø69 - Ø82

Refrigerated

FINISHES :

POLISHED SS

GOLD PLATED BRASS

ANTHRACITE - RAL 9004

VARNISHED PAINTS

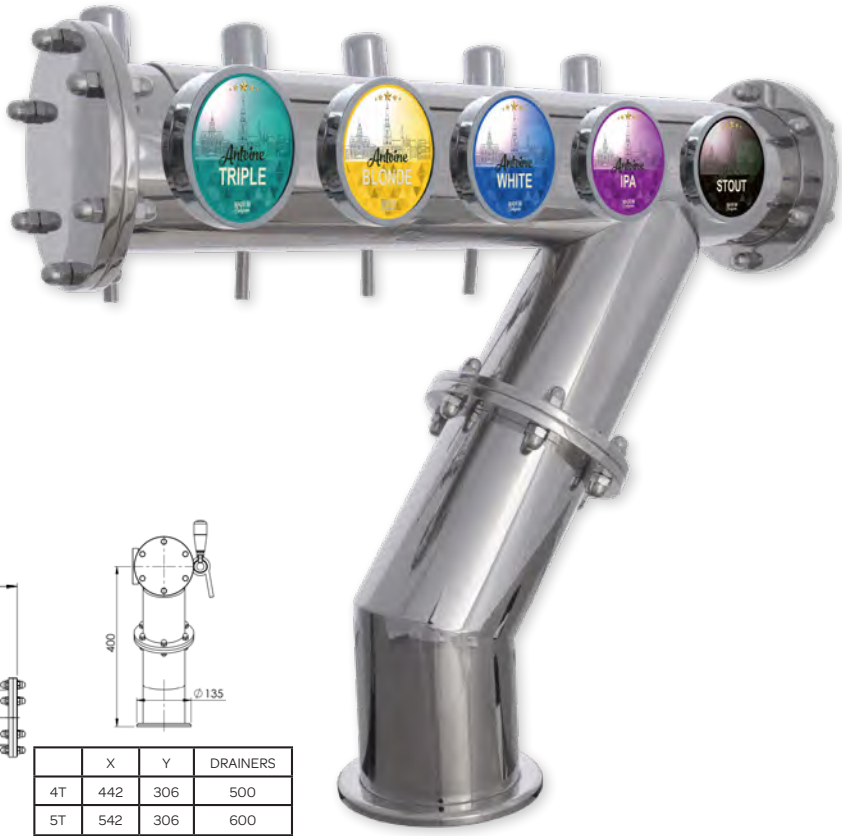

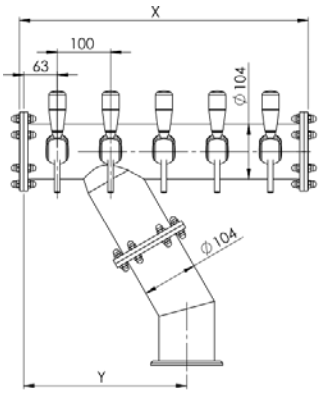

	X	Y	DRAINERS
4T	442	306	500
5T	542	306	600
6T	642	313	700
7T	742	313	800

NON-CONTRACTUAL PHOTOS

ZETA

3 - 5 taps

Option
Illumination LED
Ø69 - Ø82

Refrigerated

FINISHES :

BRUSHED SS

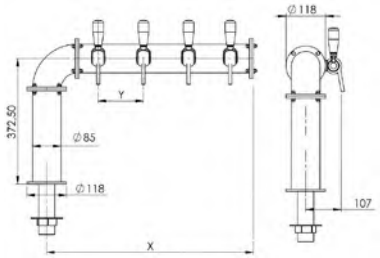

	X	Y	DRAINERS
3T	590	120	700
4T	666	120	800
5T	666	90	800

ATLANTIS

3 - 8 taps

Option
Illumination LED
Ø69 - Ø82

Refrigerated

FINISHES :

BRUSHED SS

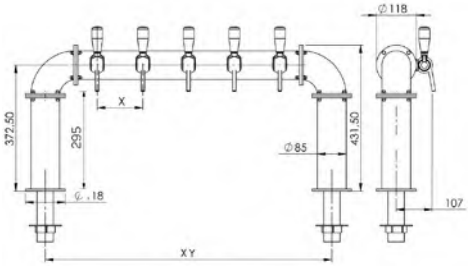

(mm)	X	XY	DRAINERS
3T	160	650	800
4T	110	650	800
5T	135	850	1000
6T	110	850	1000
7T	120	1030	1200
8T	105	1030	1200

NON-CONTRACTUAL PHOTOS

CANBERRA

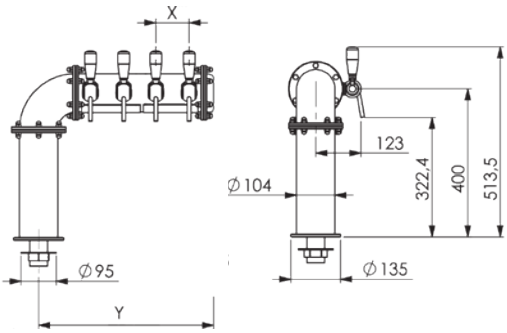

	X	Y	DRAINERS Drainers
3T	130	537	700
4T	100	537	700
5T	100	657	800

3 - 5 taps

Option
LED illuminated
Ø69 - Ø82

Refrigerated

FINISHES :

POLISHED SS

BRUSHED SS

GOLD PLATED BRASS

ANTHRACITE - RAL 9004

VARNISHED PAINTS

CANON DE
FUSIL

MELBOURNE

4 ou 6 taps
4 of 6 taps

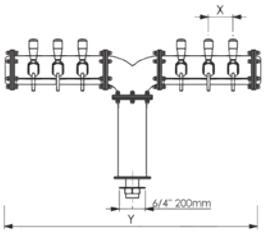

	X	Y	DRAINERS
4T	100	746	800
6T	100	946	1000

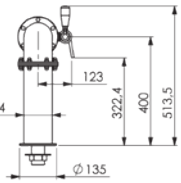

NON-CONTRACTUAL PHOTOS

BRISBANE

4 - 12 taps

Option
Illumination LED
Ø69 - Ø82

Refrigerated

FINISHES :

POLISHED SS

BRUSHED SS

GOLD PLATED BRASS

ANTHRACITE - RAL 9004

VARNISHED PAINTS

BULLET GREY

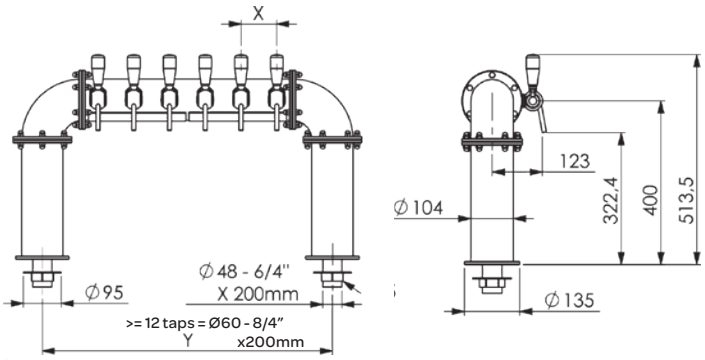

NON-CONTRACTUAL PHOTOS

BRISBANE IN COLORS

NEW

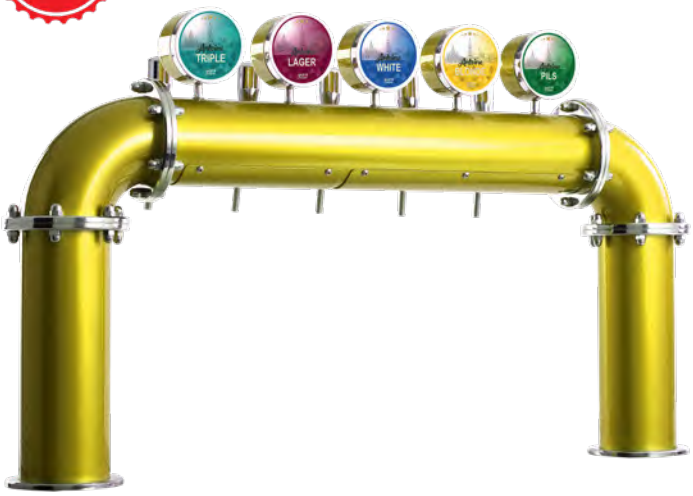

	X	Y	DRAINERS
4T	100	610	800
5T	120	810	1000
6T	100	810	1000
7T	115	1010	1200
8T	100	1010	1200
10T	100	1210	1400
12T	100	1416	1600

SPECIAL FINISHES & "VINTAGE" PUB HOLDERS ON REQUEST

NON-CONTRACTUAL PHOTOS

BI METAL

4 - 12 taps

Option
Illumination LED
Ø69 - Ø82

Refrigerated

FINISHES :

BRUSHED SS

GOLD PLATED BRASS

ANTHRACITE - RAL 9004

VARNISHED PAINTS

BULLET
GREY

Removable access hatch

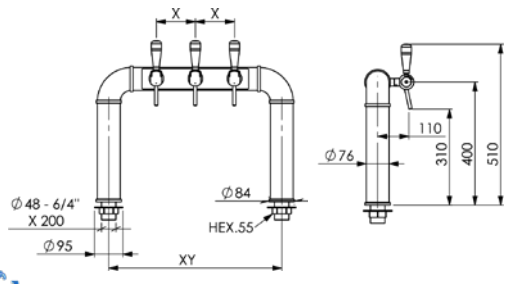

	XY	X	DRAINERS
3T	660	130	800
4T	790	130	1000
5T	840	110	1000
6T	950	110	1200
7T	1060	110	1200
8T	1100	100	1250
9T	1200	100	1400
10T	1300	100	1400

NON-CONTRACTUAL PHOTOS

DELTA SINCENY - ACAJOU

ACAJOU

SINCENY

ACAJOU

3 - 5 taps

Option
LED Illuminated
Ø69 - Ø82

Refrigerated

FINISHES :

CHROMED BRASS

GOLD PLATED BRASS

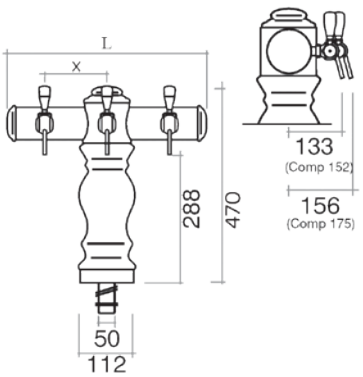

	L	X	DRAINERS
3T	447	150	500
4T	547	100	600
5T	547	100	600
6T	747	100	800
7T	747	100	800

NON-CONTRACTUAL PHOTOS

AQUA

1 tap

Not illuminated
Sticker included

Not refrigerated

New aqua

Aqua sphéro

Aqua quadro

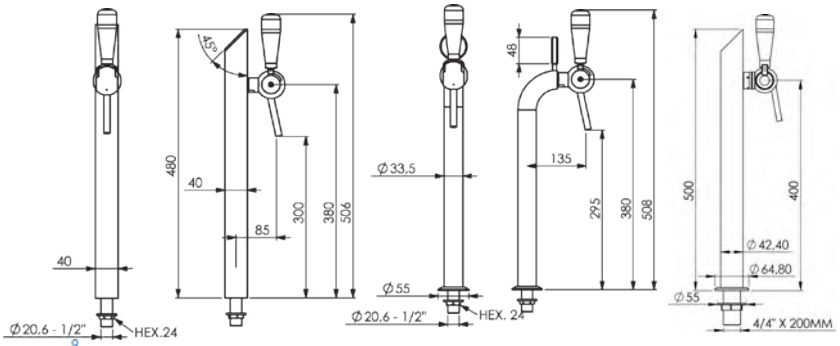

NON-CONTRACTUAL PHOTOS

CUSTOM BRISBANE

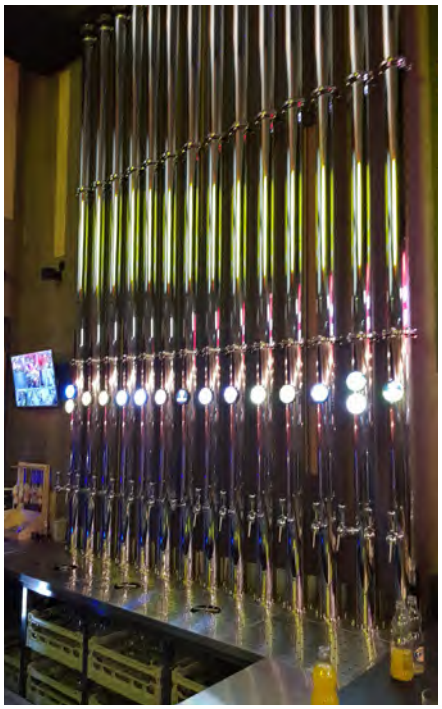

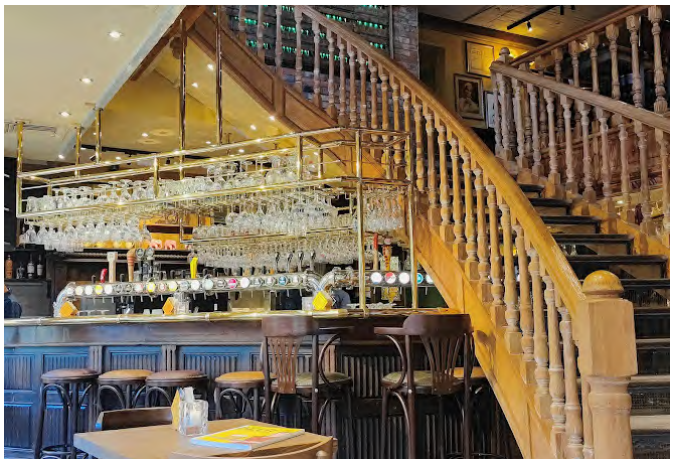

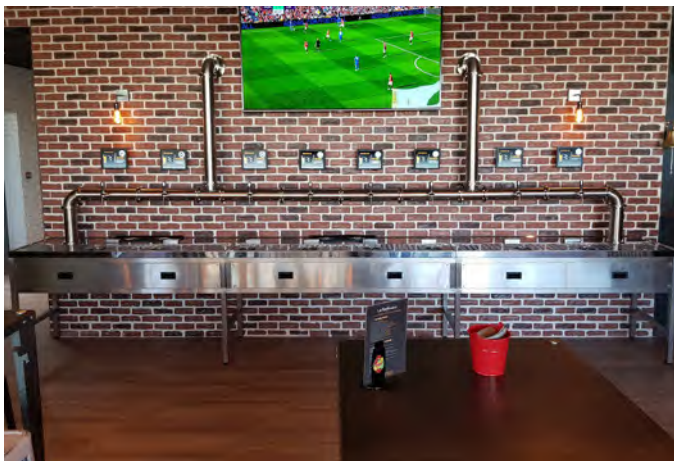

BEER TOWERS

NON-CONTRACTUAL PHOTOS

CUSTOM TOWERS

Beam tower

Number of taps max. 8

Faro : 1 tap

Beam 1 tap

Sphéro Wood Rust effect

NON-CONTRACTUAL PHOTOS

ANTIQUE TOWER

ON REQUEST

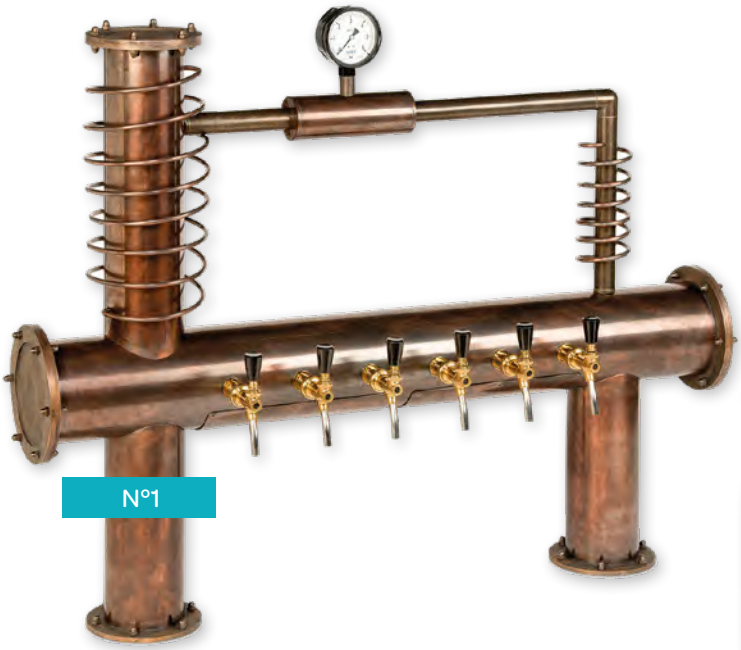

N°1

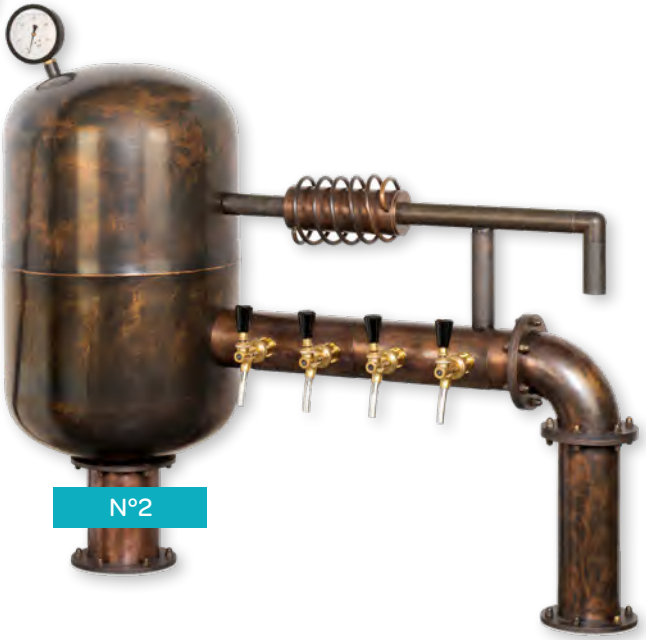

N°2

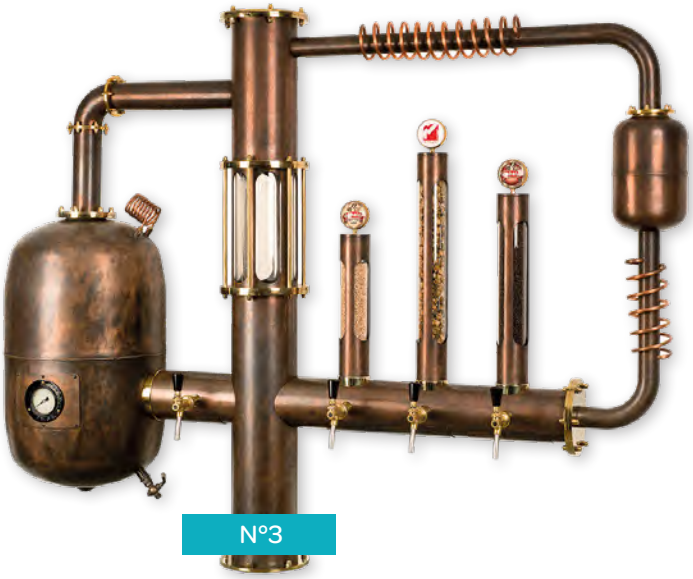

N°3

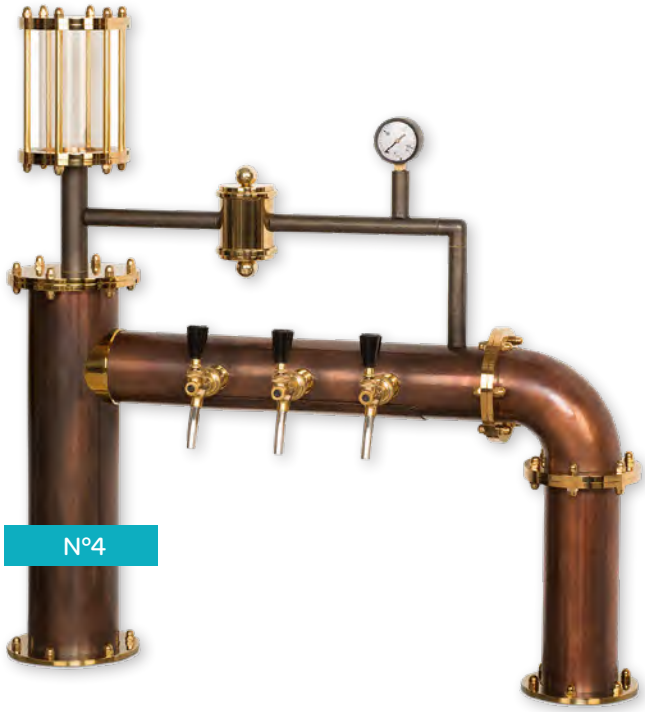

N°4

NON-CONTRACTUAL PHOTOS

BEERWALLS

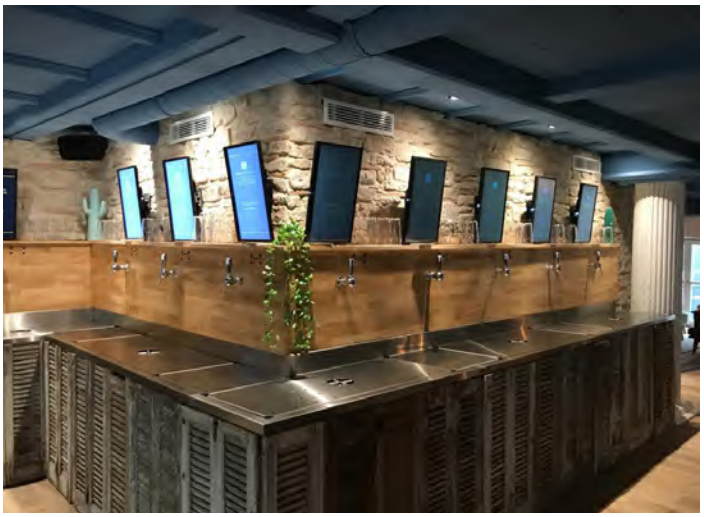

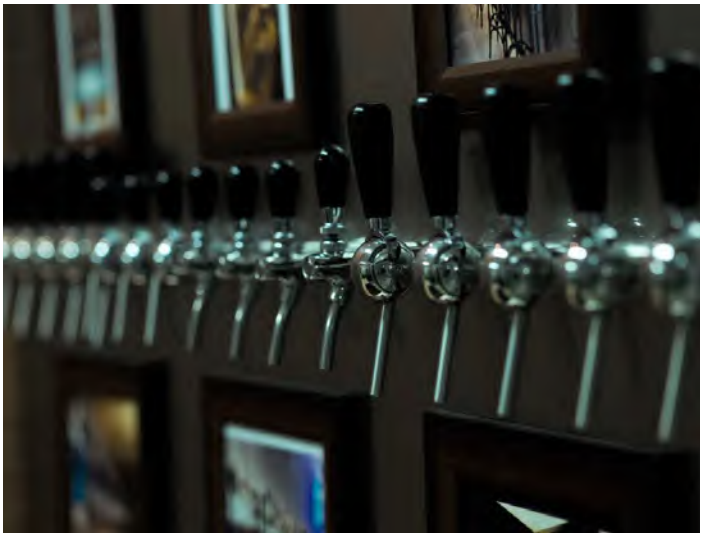

NON-CONTRACTUAL PHOTOS

ADVERTISING

Lens Fish eyes Ø69

Lens fish eyes Ø82

Flat lens Ø82

- Round illuminated fish eye lens Ø 69 mm
- Round pub holder fish eye lens Ø 82 mm
- Round pub holder flat lens Ø 82 mm

PUBLICITY HOLDERS

	Ref	Description
	186C010*00000 n° 10	Stainless steel Round: Ø 80 ou 70 mm
	186C009*00000 n° 9	Stainless steel Oval - Vertical Width : 63 mm Height : 75 mm

- Round pub holder for stickers Ø 48 mm

Description	
186C000*W0000	CHALKBOARD

CLAMPS

Description
167C000*00000 - Clamps N°1 5/4 - 4/4
169C000*00000 - Clamps N°3 5/4 - 4/4 + Drainer 400x180 mm, smaller drainer upon request

Clamps N°1

Clamps N°3

*Customised clamps are available on demand (DUOCLAMPS,...)

NON-CONTRACTUAL PHOTOS

DEBITAP

Reference	Description
171C000*00401	debitap Titanium gold
171C000*00001	debitap polished stainless steel
171C101*55101	debitap polished stainless steel dented rear connection
171C072*00101	debitap polished stainless steel flare
	debitap polished stainless steel Direct flow with JG connection on tap

DEBITAP SUPERFLOW

Reference	Description
176C000*00006	debitap superflow 12 mm thread 1/2" - 5/8" Titanium gold
176C000*00001	debitap superflow polished stainless steel 12 mm thread 1/2"- 5/8" Also available with JG5/16 or 3/8
176C201*00001	debitap superflow with foam maker for beer or nitro coffee polished stainless steel 12 mm thread 1/2"- 5/8" Also available with JG5/16 or 3/8

ADAPTOR

Reference	Description
170C400*03000	flare adaptor for nylon (2 pcs)
170C400*02000	flare adaptor for stainless steel (3 pcs)

REAR CONNECTION

Reference	Rear connection for tap brass or chromed
170C108*00121	12 mm 1/2
170C108*00251	25 mm 1/2
170C108*00301	30 mm 1/2 - 5/8
170C108*00401	40 mm 1/2 - 5/8
170C108*00501	50 mm 1/2
170C108*00601	60 mm 1/2 - 5/8
Rear connections special measures on demand minimum 50 PC	

NON-CONTRACTUAL PHOTOS

ECOTAP

Reference	Description
173C300*00004	ecotap gold-plated 35 mm thread 1/2" - 5/8""
173C300*00002	ecotap CHROMED BRASS 1/2" - 5/8" thread 35, 55 mm Available in stainless steel upon request

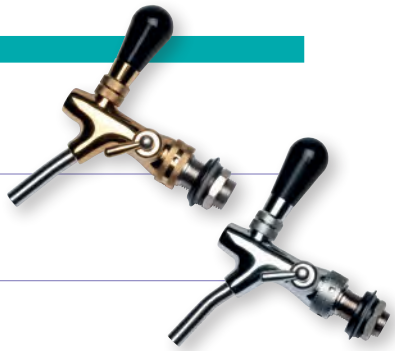

EVENT-TAP

Reference	Description
175C000*00200	Event - tap 5 mm thread 1/2 JG 3/8

HANDLES

Reference	Description
184C000*00002	brass handle thread M10
184C000*00001	chromed handle thread M10
181C001*00001	black bakelite handle thread M10
185C000*00001	BRUSHED handle thread M10
180C500*00000	White Handle "Elegance" thread M10
180C500*00010	Black Handle "Elegance" thread M10

NEW

CUSTOMISED HANDLE

Reference	Description
180C100*00000	Customised plastic handle

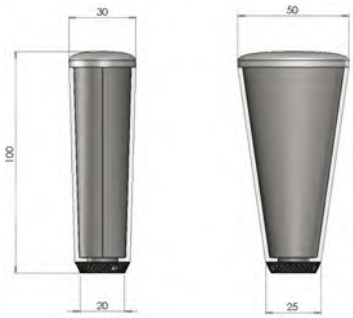

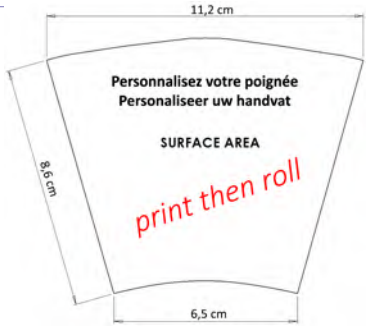

NON-CONTRACTUAL PHOTOS

ALPHA II®

Reference	Description
A3201	Alpha2 1/2" L 13 mm - Ø 8 mm Brass
A3202	Alpha2 1/2" L 13 mm - Ø 8 mm CHROMED BRASS
A3101	Alpha2 Dented front for dented rear connection Brass
A3100	Alpha2 Dented front for dented rear connection CHROMED BRASS
A3001	Alpha2 compensator 1/2" L 13 mm Brass
A3000	Alpha2 compensator 1/2" L 13 mm CHROMED BRASS
A3081	Alpha2 compensator 1/2" L 30 mm - JG 3/8" Brass
A3080	Alpha2 compensator 1/2" L 30 mm - JG 3/8" CHROMED BRASS

A4111	Threaded rear connection 10 mm (fixed part + ring)) Polished brass
A4121	Threaded rear connection 22 mm (fixed part + ring) Polished brass
A4141	Threaded rear connection 30 mm (fixed part + ring) Polished brass
A4110	Threaded rear connection 10 mm (fixed part + ring) CHROMED BRASS
A4120	Threaded rear connection 22 mm (fixed part + ring) CHROMED BRASS
A4140	Threaded rear connection 30 mm (fixed part + ring) CHROMED BRASS

POIGN001	Alu handle Brass
POIGN002	Alu handle Chromed
POIGN003	Alu handle Pearl-chromed
POIGN004	Alu handle BRUSHED chrome

NON-CONTRACTUAL PHOTOS

DRAINERS & DRIPTRAYS

Ref	Dimensions	With perforated plate
204	250X 400 X 40 mm	1 hole
205	400 X 400 X 40 mm	1 to 2 holes
206	500 X 400 X 40 mm	1 to 2 holes
207	600 X 400 X 40 mm	1 to 3 holes
208	700 X 400 X 40 mm	1 to 4 holes
208C500	1000 X 400 X 40 mm	1 to 5 holes
209C	1200 x 400 x 40 mm	1 to 5 holes
214	500 X 500 X 50 mm	1 to 2 holes
210	600 X 500 X 50 mm	1 to 3 holes
211	800 X 500 X 50 mm	1 to 4 holes
212	1000 X 500 X 50 mm	1 to 5 holes

Supplement for glass rinser

Ref	Dimensions	Drainer for glasses with total perforated plate
205C100	400 X 400 mm X 40 mm	
206C100	500 X 400 mm X 40 mm	
207C100	600 X 400 mm X 40 mm	
208C100	700 X 400 mm X 40 mm	
209C100	800 X 400 mm X 40 mm	
213C100	1000 X 400 mm X 40 mm	

Supplement for glass rinser

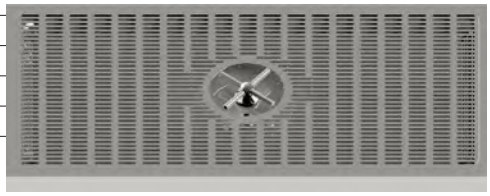

Ref	Dimensions	Driptrays with perforated plate
219C001	300 X 180 X 30 mm	
220	400 X 180 X 30 mm	
221	600 X 180 X 30 mm	

Ref	Dimensions	Drainers for glasses
230	500 X 500 X 50 mm	
231	600 X 500 X 50 mm	
232	700 X 500 X 50 mm	
233	800 X 500 X 50 mm	
234	1000 X 500 X 50 mm	

Supplement for glass rinser

Ref	Dimensions	Drainers for towers half-lined models
		With discharge
235	600 X 500 X 50 mm	1 to 3 holes
236	700 X 500 X 50 mm	1 to 3 holes
237	800 X 500 X 50 mm	1 to 4 holes
238	1000 X 500 X 50 mm	1 to 5 holes
239	1200 X 500 X 50 mm	1 to 5 holes

Supplement for glass rinser

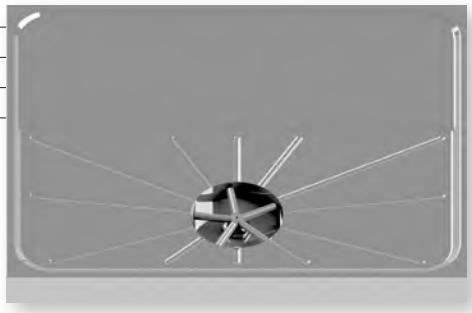

DRAINERS & SINKS

Funnels included

OPTION
Combined discharge
Syphon
Watertap
Glass rinser

Depth sink: 220 mm

Ref.	Width x depth x height	
255C000*1	800 x 500 x 50 mm, equipped with : 2 sinks of 290 X 350 mm 2 funnels	
256C000*1	1000 x 500 x 50 mm, equipped with : 2 sinks of 290 X 350 mm (left, right or middle) 2 funnels	
257C000*1	1200 x 500 x 50 mm, equipped with : 2 sinks of 290 X 350 cm (left, right or middle) 2 funnels	

Half lined		Half perfored plate	
258C150*1	1500 x 500 x 50 mm, equipped with: 2 sinks of 290 X 350 mm (left, right or middle) drainer half lined 1 to 5 holes 2 funnels	258C150*0	1500 x 500 x 50 mm,equipped with: 2 sinks of 290 X 350 mm (left, right or middle) drainer half perforated plate 1 to 5 holes 2 funnels
259C100	2000 x 500 x 50 mm, equipped with: 2 sinks of 29 x 35 cm (left or right) drainer half lined 0 to 5 holes 2 funnels	250C000	2000 x 500 x 50 mm, equipped with: 2 sinks of 290 x 350 mm (left or right) drainer half perforated plate 0 to 5 holes 2 funnels
259C500	2500 x 500 x 50 mm, equipped with: 2 sinks of 290 x 350 mm (left or right) drainer half lined 0 to 5 holes 2 funnels	259C400	2500 x 500 x 50 mm, equipped with: 2 sinks of 290 x 350 mm (left or right) drainer half perforated plate 0 to 5 holes 2 funnels
225C00*00001	Supplement for glass-rinser		

NON-CONTRACTUAL PHOTOS

CUSTOM MADE DRAINERS

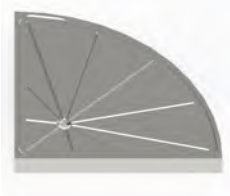

Custom made drainer

Base for drainer

Special pieces

ACCESSORIES & CLEANING PRODUCTS

Réf. / Ref.	Description	6/4	4/4
263	**Funnels**		
264	**Watertap cold**		
265	**Watertap cold & warm**		
266	**Brush for glasses**		
267	**Becharein**		
OUT*PRO	**Maintenance / Protal for fonts**		
268	**Combined discharge**		
269	**Syphon**		
271	**Foam-cutter**		
272	**Stainless steel cup for foam-cutter**		
171CBOU	**Pear for cleaning outlet tap**		

	Description
225C000*00501	**Glass rinser for drainers - Ø 102 mm** • New design that prevents and minimizes the risk of bacterial transfer. • water pipe included

6/4"

Beer-cooler “Reversible” BANCO

- Reversible (Horizontal)
- Adjustable water tank and ice bank
- Frame in skinplate

Model	Banco 40 L
Reference :	412C
Compressor :	1/4 HP
Power consumption:	0°C = 270 W - -10°C = 228 W
Cooling capacity :	0°C = 559 W - -10°C = 364 W
Number of coils max :	2 x 20 M + 1 x 10 M
Water tank :	40 L
Ice bank :	18 kg
Dimensions mm (WxDxH): Vertical : Horizontal :	 (405x445x735) (750x445x475)
Weight:	28 kg

Model	Banco 60 L
Reference :	415C
Compressor :	1/3 HP
Power consumption:	0°C = 360 W - -10°C = 303 W
Cooling capacity :	0°C = 745 W - -10°C = 485 W
Number of coils max :	3 x 25 M + 1 x 10 M
Water tank :	60 L
Ice bank :	30 kg
Dimensions mm (WxDxH): Vertical : Horizontal :	 (485x485x860) (805x505x510)
Weight:	42 kg

Model	Banco 90 L
Reference :	422C
Compressor :	1/2 HP
Power consumption:	0°C = 540 W - -10°C = 455 W
Cooling capacity :	0°C = 1118 W - -10°C = 727 W
Number of coils max :	5 x 25 M + 1 x 10 M
Water tank :	90 L
Ice bank :	45 kg
Dimensions mm (WxDxH): Vertical : Horizontal :	 (585x595x915) (950x595x610)
Weight:	52 kg

NON-CONTRACTUAL PHOTOS

(not reversible)

Model	Banco 14 L
Reference :	407C
Compressor :	1/5 HP
Power consumption:	0°C = 216 W - -10°C = 182 W
Cooling capacity :	0°C = 447 W - -10°C = 290 W
Number of coils max :	1 x 15 m or 2 x 10 m
Water tank :	14 L
Ice bank :	4 kg
Dimensions mm (WxDxH) :	(325x300x665)
Weight:	20,5 kg

(not reversible)

Model	Banco 144 L
Reference :	432C
Compressor :	3/4 HP
Power consumption:	0°C = 810 W - -10°C = 682 W
Cooling capacity :	0°C = 1677 W - -10°C = 1090 W
Number of coils max :	10 x 25 M + 2 x 10 M
Water tank :	144 L
Ice bank :	75 kg
Dimensions mm (WxDxH):	(1230x555x595)
Weight:	59 kg

BEER-COOLER COMPACT

Modèle	25 L	90 L	140 L
Compressor :	1/4 HP	1/2 HP	3/4 HP
Power consumption:	0°C = 270 W -10°C = 228 W	0°C = 540 W -10°C = 455 W	0°C = 1080 W -10°C = 910 W
Cooling capacity :	0°C = 559 W -10°C = 364 W	0°C = 1118 W -10°C = 727 W	0°C = 2236 W -10°C = 1454 W
Ice bank :	8 kg	45 kg	75 kg
Water tank :	25 L	90 L	144 L
Number of coils max. :	2 X 18 M + 1 X 10 M	4 X 22 M + 1 X 10 M	10 x 25 M + 2 x 10 M
Dimensions mm (WxDxH) :	(535x340x590)	(775x510x620)	(860 X 580 X 900 (vertical))
Weight :	28 kg	46 kg	65 kg

WATERBATH

Modèle	60 L	90 L	144 L
Compressor not included :	1/3 HP	1/2 HP	3/4 or 1 HP
Power consumption:	à 0°C = 315 W à -10°C = 265 W	à 0°C = 540 W à -10°C = 455 W	à 0°C = 810 W à -10°C = 682 W
Cooling capacity :	à 0°C = 730 W à -10°C = 475 W	à 0°C = 1118 W à -10°C = 727 W	à 0°C = 1600 W à -10°C = 1000 W
Ice bank :	30 kg	40 kg	75 kg
Number of coils max. :	3x22m + 1x10m	5x22m + 1x10m	10x25 + 2x10
Water tank :	60 L	90 L	144 L
Dimensions mm (WxDxH) :	(540x465x595)	(625x55x590)	(940x550x590)
Weight :	19 kg	24 kg	32 kg

PUMPS & AGITATORS

Reference	
666C000*00000	Agitator 1500 T/M
661C000*00300	Agitator 2500 T/M
656C000*P1407	Circulation pump - height mano. 7 m - 30 W - 0,14 A
658C000*P1312	Circulation pump - height mano. 12 m - 60 W - 0,27 A
658C000*P1320	Circulation pump - height mano. 18 m - 90 W - 0,41 A
659C000*00023	Circulation pump - height mano. 23 m - 90 W - 0,41 A

662C000*00001	Thermostat type K50 from -2,5° to +10°C - capillary lenght 1,2 m
389C000*00500	Immerged circulation pump

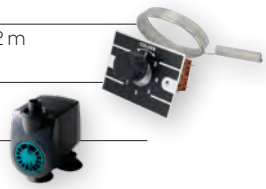

NON-CONTRACTUAL PHOTOS

Hometap

Taste a perfect beer.

	777C300*00010
Led illuminated	Oui - Ja
Ventilated cooling	Oui - Ja
Column cooling system	Oui - Ja
Key lock	Oui - Ja
Dimension (LxDxH) :	600x600x1400 mm
Power & Annual consumption :	120 Watts - 660kWh/ year
Adjustable temperature range :	1 - 8° C
Interior fan :	OUI / JA
Exterior color :	BRUSHED stainless steel
Refrigerant type :	R600
equipped with :	1 drip tray with perforated grid: 300x180x30 mm 1 Manhattan column with easy cleaning system 1 "Sodastream" mini CO2 cylinder-mounted regulator 1 easy cleaning kit: 3 beer lines, 5 cleaning tablets, 1 disconnection key. 4 Ø 80mm wheels, 2 with brakes Sankey or alumasc coupling head

Designed for 2 x 20-liters kegs

CO2 integrated into the fridge: sodastream

Save on maintenance!

No special knowledge required.
Total interview time: 5 minutes!
Watch our explanatory video on our website with this QR code!

NON-CONTRACTUAL PHOTOS

KEG - COOLERS

Ref.	Description
524C001*05500A	**2 X 20 L** For 2 kegs Dimensions (W x D x H) 620 x 575 x 820/860 mm 2 kegs of 20 L Built-in monobloc Finish: grey anthracite Power : 345 W Cooling gas : R290
524C001*08800A	**4 X 20 L * 1 X 30 L * 1 X 50 L** For 4 kegs External dimensions (W x D x H) 880 X 590 X 820/860 mm Internal dimensions 500 X 500 X 765 mm Built-in monobloc Finish: grey anthracite Power : 345 W Cooling gas : R290
524C001*11100A	**6 X 20 L * 1 X 30 L * 1 X 50 L** For 6 kegs External dimensions (W x D x H) 1110 X 590 X 820/860 mm Internal dimensions 730 X 500 X 765 mm Built-in monobloc Finish: grey anthracite Power : 345 W Cooling gas : R290
524C001*13500A	**8 X 20 L * 2 X 30 L * 2 X 50 L** For 8 kegs External dimensions (W x D x H) 1350 X 590 X 820/860 mm Internal dimensions 970 X 500 X 765 mm Built-in monobloc Finish: grey anthracite Power : 345 W Cooling gas : R290

REMOVABLE MONOBLOC

NON-CONTRACTUAL PHOTOS

FOR 1 TAP

Reference	Description
524C001*05500A	**1 keg-cooler 2X20L (LXDXH): 620 x 590 x 820/880 mm**
On choice	1 tower 1 tap
On choice	1 drainer L max. 620 mm
302C000*01500	1 pressure regulator 2 levels 1,5 bars
On choice	1 coupling head A or S with elbow valve
524C100*00001	1 accessories kit
524C000*VEN01	1 Fanset for keg-cooler
524C100*00004	1 complete assembly in workshop
	In option :
524C001*ROU01	Mobile : 4 wheels Ø 125 mm (2 with brakes)

FOR 2 TAPS

Référence	Description
524C001*08800A	**keg-cooler 4X20L (LXDXH): 880 x 590 x 820/880 mm**
On choice	1 tower 2 taps
On choice	1 drainer L max. 880 mm
302C000*01500	1 pressure regulator 2 levels 1,5 bars
On choice	2 coupling heads A ou S with elbow valve
524C100*00001	1 accessories kit
524C000*VEN01	1 Fanset for keg-cooler
524C100*00004	1 complete assembly in workshop
	In option :
524C001*ROU01	Mobile : 4 wheels Ø 125 mm (2 with brakes)

FOR 3 TAPS

Référence	Description
On choice	**keg-cooler 6X20L (LXDXH): 1110 x 590 x 820/880 mm**
On choice	1 tower 3 taps
On choice	1 drainer L max. 1100 mm
302C000*01500	1 pressure regulator 2 levels 1,5 bars
On choice	3 coupling heads A or S with elbow valve
524C100*00001	1 accessories kit
524C000*VEN01	1 Fanset for keg-cooler
524C100*00005	1 complete assembly in workshop
	In option :
524C001*ROU01	Mobile : 4 wheels Ø 125 mm (2 with brakes)

FOR 4 TAPS

Référence	Description
On choice	**keg-cooler 8X20L (LXDXH): 1350 x 590 x 820/880 mm**
On choice	1 tower 4 taps
On choice	1 drainer L max. 1350 mm
302C000*01500	1 pressure regulator 2 levels 1,5 bars
On choice	4 coupling heads A or S with elbow valve
524C100*00001	1 accessories kit
524C000*VEN01	1 Fanset for keg-cooler
524C100*00005	1 complete assembly in workshop
	In option :
524C001*ROU01	Mobile : 4 wheels Ø 125 mm (2 with brakes)

BOTTLE COOLERS "VISION"

	777C300*00010	777C200*00010
Gross capacity :	372 L	372 L
Number of 33cl-50cl cans :	455 - 301	455 - 301
Number of 33cl or 50cl bottles :	217	217
Power consumption:	295 W - 1.66KWh/24h	295 W - 1.66KWh/24h
Dimension (LxDxH) :	595x640 x1840 mm	595x640 x1980 mm
Canopy :	NO	YES
Adjustable temperature range :	1 - 10° C	1 - 10° C
Interior fan :	YES	YES
Exterior color :	WHITE	WHITE
Reversible door :	YES Supplement	YES Supplement
Weight :	86 kg	89 kg
Interior lighting :	LED	LED
	2 Wheels and 2 adjustable feet	2 Wheels and 2 adjustable feet

777C300*00010

777C200*00010

777C300*00020 **BLACK**

STAINLESS STEEL PROTECTION FRAME ON WHEELS FOR BOTTLE COOLERS

référence	Description
777C300*CH010	Stainless steel protection frame for bottle coolers vision 777C300*00010 + wheels Ø80 mm
777C200*CH010	Stainless steel protection frame for bottle coolers vision 777C200*00010 + wheels Ø80 mm
777C000*00000	Stainless steel transport frame for bottle coolers vision + wheels Ø80 mm

NON-CONTRACTUAL PHOTOS

Bottle-coolers **VISION**

Référence	775C000*00010	774C000*00010	773C000*00010	775C000*00500
Volume :	122 L	191 L	300 L	67 L
Number of doors :	1	2	3	1
Number of 33cl cans :	161	276	380	110
Number of 50cl cans :	112	188	266	55
Number of 33cl bottles :	84	243	218	-
Number of 50cl bottles :	95	143	218	-
Energy consumption :	2,1 kWh / 24h	2.7 kWh/24h	4 kWh / 24h	0.83 kWh/24h
Dimension (LxDxH) :	600x520x870 mm	900x520x870 mm	1355x520x870 mm	432x496x668 mm
Weight :	53 kg	65 kg	86 kg	29 kg
Adjustable temperature range :	2 à 10 °C	2 à 10 °C	2 à 10 °C	2 à 10 °C
Thermostat type :	Electronic	Electronic	Electronic	Electronic
Cooling type :	Ventilator	Ventilator	Ventilator	Ventilator
Illumination :	LED	LED	LED	LED
Exterior color :	Black	Black	Black	Black
Adjustable feet :	4	4	4	4
Key lock :	Yes	Yes	Yes	Yes
Noise level :	45db(A)	45 db(A)	45 db(A)	44 db(A)
Refrigerant :	R600a	R600a	R600a	R600a

775C000*00010

774C000*00010

773C000*00010

775C000*00500

BOTTLE COOLER BAHUTS

Réf. / Ref.	Description / Omschrijving
780C000*00001	Bottle cooler "Bahut" **Fortified** Dimensions (WxDxH): 1030 x 620 x 1065 mm 2 sliding covers Volume : 257 Liters **With protection** Big wheels diameter 100 mm Weight : 69 kg
780C000*00002	Bottle cooler "Bahut" standard Dimensions (WxDxH): 1030 x 620 x 1015 mm 2 sliding covers Volume : 257 Liters Standard wheels Weight : 66 kg

Up to 6 crates of beers

- LED interior lighting
- Color: RAL 7021
- 2 shelves per door
- 3 storage levels
- Adjustable feet 30/50 mm (unit can be placed with/without feet)
- Option: key lock

BOTTLE COOLERS
WITH BUILT-IN COOLING UNIT- FULL DOORS

	REF.	DIMENSIONS (LXDXH)	DOORS WIDTH	CAPACITY BOTTLES 25 CL	COOLING CAPACITY	WEIGHT
	FI 124 9000C*1240	1240x550x820 mm	2 x 404 mm	120	525W - 1/4 HP - R290 220V 2,7 A	82 kg
	FI 135 9000C *1350	1350x550x820 mm	2 x 454 mm	156	525W - 1/4 HP - R290 220V 2,7 A	88 kg
	FI 154 9000C*1540	1540x550x820 mm	2 x 554 mm	208	525W - 1/4 HP - R290 220V 2,7 A	92 kg
	FI 174 9000C*1740	1740x550x820 mm	3 x 404 mm	242	525W - 1/4 HP - R290 220V 2,7 A	108 kg
	FI 188 9000C*1880	1880x550x820 mm	3 x 454 mm	270	700W - 1/3 HP - R290 220V 3,4 A	114 kg
	FI 214 9000C*2140	2140x550x820 mm	3 x 554 mm	323	700W - 1/3 HP - R290 220V 3,4 A	121 kg
	FI 240 9000C*2400	2400x550x820 mm	4 x 454 mm	384	700W - 1/3 HP - R290 220V 3,4 A	130 kg

NON-CONTRACTUAL PHOTOS

- LED interior lighting
- Color: RAL 7021
- 2 shelves per door
- 3 storage levels
- Adjustable feet 30/50 mm (unit can be placed with/without feet)
- Option: key lock

BOTTLE COOLERS
WITH BUILT-IN COOLING UNIT- GLASS DOORS

	REF.	DIMENSIONS (LXDXH)	DOORS WIDTH	CAPACITY BOTTLES 25 CL	COOLING CAPACITY	WEIGHT
	FI 154 9000C*154	1540x550x820 mm	2 x 554 mm	208	525W - 1/4 HP - R290 220 V 2,7 A	98 kg
	FI 214 9000C *214	2140x550x820 mm	2 x 554 mm	323	700W - 1/3 HP - R290 220V 3,4 A	130 kg
	FI 240 9000C*240	2400x550x820 mm	2 x 454 mm	384	700W - 1/3 HP - R290 220V 3,4 A	136 kg

BOTTLE COOLERS
SEPARATED COOLING UNIT- GLASS DOORS

	REF.	DIMENSIONS (LXDXH)	DOORS WIDTH	CAPACITY BOTTLES 25 CL	COOLING CAPACITY	WEIGHT
	FA 120 9001C*1200	1200x550x820 mm	2 x 554 mm	208	700W - 1/3 HP - R290 220V 3,4 A	69 kg
	FA 180 9001C *1800	1800x550x820 mm	3 x 554 mm	270	700W - 1/3 HP - R290 220V 3,4 A	82 kg
	FA 206 9001C*2060	2060x550x820 mm	4 x 454 mm	360	700W - 1/3 HP - R290 220V 3,4 A	86 kg
	FA 240 9001C*2400	2400x550x820 mm	4 x 554 mm	464	700W - 1/3 HP - R290 220V 3,4 A	92 kg

NON-CONTRACTUAL PHOTOS

BOTTLE COOLERS
SEPARATED COOLING UNIT - FULL DOORS

- LED interior lighting
- Color: RAL 7021
- 2 shelves per door
- 3 storage levels
- Adjustable feet 30/50 mm (unit can be placed with/without feet)
- Option: key lock

	REF.	DIMENSIONS (LXDXH)	DOORS WIDTH	CAPACITY BOTTLES 25 CL	COOLING CAPACITY	WEIGHT
	FA 90 9001C*0900	900x550x820 mm	2 x 404 mm	176	525W - 1/4 HP - R290 220 V-2,7 A	62 kg
	FA 101 9001C *1010	1010x550x820 mm	2 x 454 mm	190	525W - 1/4 HP - R290 220 V-2,7 A	65 kg
	FA 120 9001C*1200	1200x550x820 mm	2 x 554 mm	208	525W - 1/4 HP - R290 220 V-2,7 A	69 kg
	FA 140 9001C*1400	1400x550x820 mm	3 x 404 mm	243	525W - 1/4 HP - R290 220 V-2,7 A	74 kg
	FA 154 9001C*1535	1530x550x820 mm	3 x 454 mm	270	700W - 1/3 HP - R290 220V - 3,4 A	78 kg
	FA 180 9001C*1800	1800x550x820 mm	3 x 554 mm	303	700W - 1/3 HP - R290 220V - 3,4 A	82 kg
	FA 206 9001C*2060	2060x550x820 mm	4 x 454 mm	336	700W - 1/3 HP - R290 220V - 3,4 A	86 kg
	FA 240 9001C*2400	2400x550x820 mm	4 x 554 mm	464	700W - 1/3 HP - R290 220V - 3,4 A	92 kg

NON-CONTRACTUAL PHOTOS

BOTTLE COOLERS

SEPARATED COOLING UNIT - DOUBLE SIDES- FULL DOORS

	REF.	DIMENSIONS (LXDXH)	DOORS WIDTH	CAPACITY BOTTLES 25 CL	COOLING CAPACITY	WEIGHT
	FA 120 9001C*120	1200x550x820 mm	2 x 554 mm	208	525W - 1/4 HP - R290 220 V 2,7 A	69 kg
	FA 140 9001C *140	1400x550x820 mm	3 x 404 mm	243	525W - 1/4 HP - R290 220 V 2,7 A	74 kg
	FA 180 9001C*180	1800x550x820 mm	3 x 554 mm	270	700W - 1/3 HP - R290 220V 3,4 A	82 kg
	FA 206 9001C*206	2060x550x820 mm	4 x 454 mm	360	700W - 1/3 HP - R290 220V 3,4 A	86 kg
	FA 240 9001C*240	2400x550x820 mm	4 x 554 mm	464	700W - 1/3 HP - R290 220V 3,4 A	92 kg

SEPARATED COOLING UNIT - DOUBLE SIDES- GLASS DOORS

	REF.	DIMENSIONS (LXDXH)	DOORS WIDTH	CAPACITY BOTTLES 25 CL	COOLING CAPACITY	WEIGHT
	FA 120 9001C*1200	1200x550x820 mm	2 x 554 mm	208	700W - 1/3 HP - R290 220V - 3,4 A	69 kg
	FA 180 9001C *1800	1800x550x820 mm	3 x 554 mm	270	700W - 1/3 HP - R290 220V - 3,4 A	82 kg
	FA 206 9001C*2060	2060x550x820 mm	4 x 454 mm	360	700W - 1/3 HP - R290 220V - 3,4 A	86 kg
	FA 240 9001C*2400	2400x550x820 mm	4 x 554 mm	464	700W - 1/3 HP - R290 220V - 3,4 A	92 kg

NON-CONTRACTUAL PHOTOS

BOTTLE COOLERS
WITH BUILT-IN COOLING UNIT- WITH DRAWERS

- LED interior lighting
- Color: RAL 7021
- 2 shelves per door
- 3 storage levels
- Adjustable feet 30/50 mm (unit can be placed with/without feet)
- Option: key lock

	REF.	DIMENSIONS (LXDXH)	DOORS WIDTH	DRAWERS	COOLING CAPACITY	WEIGHT
	FI 154 9000C*1540	1540x550x820 mm	1 x 554 mm	1 x 2	525W - 1/4 HP - R290 220 V-2,7 A	98 kg
	FI 154 9000C*1540	1540x550x820 mm	0	2 x 2	525W - 1/4 HP - R290 220 V-2,7 A	98 kg
	FI 214 9000C*2140	2140x550x820 mm	2	1 x 2	700W - 1/3 HP - R290 220V - 3,4 A	121 kg
	FI 214 9000C*2140	2140x550x820 mm	1	2 x 2	700W - 1/3 HP - R290 220V - 3,4 A	121 kg
	FI 214 9000C*2140	2140x550x820 mm	0	3 x 2	700W - 1/3 HP - R290 220V - 3,4 A	121 kg

LARGE MODEL (2 DRAWERS)

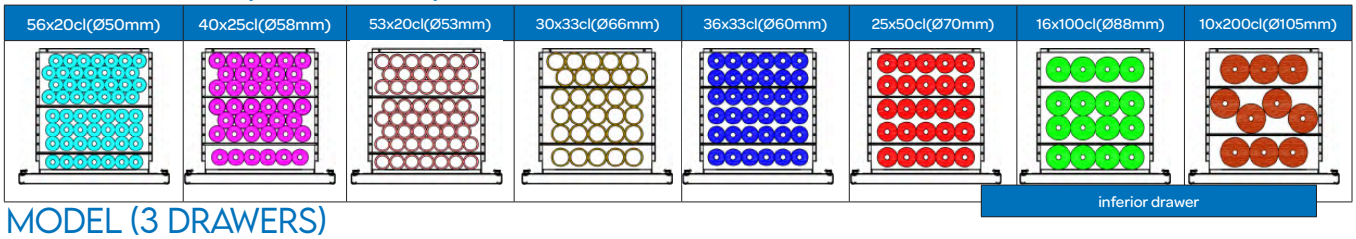

MODEL (3 DRAWERS)

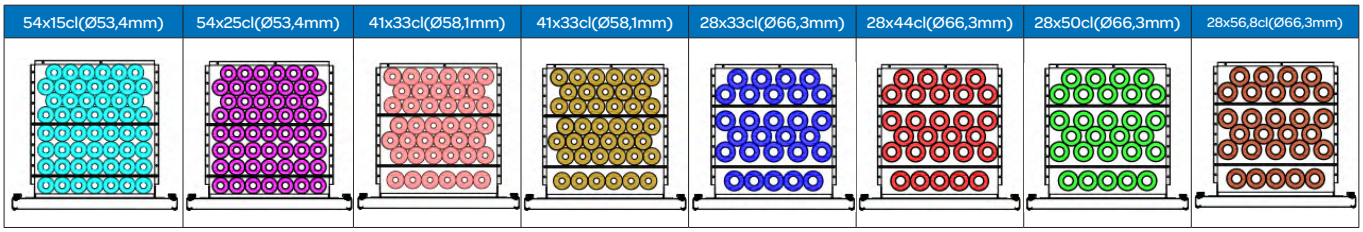

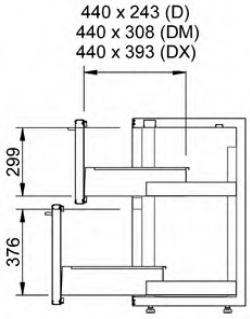

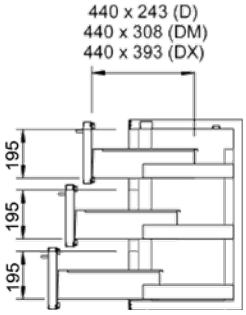

NON-CONTRACTUAL PHOTOS

- LED interior lighting
- Color: RAL 7021
- 2 shelves per door
- 3 storage levels
- Adjustable feet 30/50 mm (unit can be placed with/without feet)
- Option: key lock

BOTTLE COOLERS

SEPARATED COOLING UNIT - WITH DRAWERS

	REF.	DIMENSIONS (LXDXH)	DOORS WIDTH	DRAWERS	COOLING CAPACITY	WEIGHT
	FA 120 9001C*1200	1200x550x820 mm	1 x 554 mm	1 x 2	525W - 1/4 HP - R290 - 220V 2,7 A	69 kg
	FA 120 9001C*1200	1200x550x820 mm	0	2 x 2	525W - 1/4 HP - R290 220V 2,7 A	69 kg
	FA 180 9001C*1800	1800x550x820 mm	2 x 554 mm	1 x 2	525W - 1/4 HP - R290 220V 2,7 A	82 kg
	FA 180 9001C*1800	1800x550x820 mm	1 x 554 mm	2 x 2	700W - 1/3 HP - R290 220V 3,4 A	82 kg
	FA 180 9001C*1800	1800x550x820 mm	0	3 x 2	700W - 1/3 HP - R290 220V 3,4 A	82 kg
	FA 240 9001C*2400	2400x550x820 mm	3 x 554 mm	1 x 2	700W - 1/3 HP - R290 220V 3,4 A	92 kg
	FA 240 9001C*2400	2400x550x820 mm	2 x 554 mm	2 x 2	700W - 1/3 HP - R290 220V 3,4 A	92 kg
	FA 240 9001C*2400	2400x550x820 mm	1 x 554 mm	3 x 2	700W - 1/3 HP - R290 220V 3,4 A	92 kg
	FA 240 9001C*2400	2400x550x820 mm	0	4 x 2	700W - 1/3 HP - R290 220V 3,4 A	92 kg

Python-line polyethylene beer 3/8" water 1/2"

649C000*00100	2 beer lines + 2 water circulations interior Ø 12,7 mm insulation 19 mm Armaflex exterior Ø 70 mm
649C001*01000	3 beer lines + 2 water circulations interior Ø 12,7 mm insulation 19 mm Armaflex exterior Ø 70 mm
649C002*01000	4 beer lines + 2 water circulations interior Ø 12,7 mm insulation 19 mm Armaflex exterior Ø 70 mm
649C003*01000	5 beer lines + 2 water circulations interior Ø 12,7 mm insulation 19 mm Armaflex exterior Ø 70 mm
649C004*01000	6 beer lines + 2 water circulations interior Ø 12,7 mm insulation 19 mm Armaflex exterior Ø 70 mm
649C008*01000	7 and 8 beer lines + 2 water circulations interior Ø 12,7 mm insulation 19 mm Armaflex exterior Ø 70 mm

Quick-coupling for python-lines and accesories

380C000*00003	PI 0416S union double equal 1/2"
380C005*00024	PI UB16S by-pass U 1/2"
380C015*00002	PI 221616S bend nipple 1/2"
380C015*00003	PI 0316S angled union equal 1/2"
380C001*00002	PI 0216S T 1/2"
380C006*00050	PI 251616S connector tube to hose stem 1/2"
649C100*00001	By-pass fitting in stainless steel Diameter entrance and exit 12,7 mm
649C100*00002	Pump - python fitting Diameter entrance: 8 mm Diameter exit: 12,7 mm
649C100*00002	Key to disconnect John Guest connectors MADE BY ANTOINE

NON-CONTRACTUAL PHOTOS

Maintenance products & Tools

Ref.	Description
	Plumbing tools **Maintenance products**
372C000*00000	Stainless steel tube cutter Short model
373C000*00000	Stainless steel tube cutter Big model
376C000*00003	Bending spring for stainless steel tube Ø 7/8
376C000*00004	Bending spring for stainless steel tube Ø 8/9
379C000	Cleaning sponges in sacks of 100 pieces. Ø 7, 8 or 9 mm.
381C000*00001	Cleaning brush for outlet tap Ø 11 mm.
382C000*00000	Cleaning brush for keg-coupler Alumasc
382C000*00001	Cleaning brush for keg-coupler Sankey
383C000*00003	Purexol in bottle of 1 L.
383C000*00000	Purexol in bottle of 10 L.
OUT*PRO*00001	Maintenance product for all metals PROTALL
267C000*00010	Maintenance product for the cleaning of glasses BECHAREIN
384C000*00100	Grease for tap in tube of 60 gr.
385C000*00005	Cleaning adapter ECOTAP
389C000*00000	Electric cleaning pump MINIMAX
348C000*0100	Professional thermometer waterproof -50°C to 300°C
	Accessories for cleaning pump
346C006*00100	Rinsing adapter SANKEY / ALUMASC
346C006*00101	Rinsing adapter SANKEY / SANKEY
346C006*00102	Rinsing adapter ALUMASC / ALUMASC
	Cleaning bottle
335CBID*09000	Stainless steel cleaning bottle 9 L. (3 couplers to determine)
335CBID*09001	Stainless steel cleaning bottle 9 L. (5 couplers to determine)
335CBID*PL001	Cleaning head sankey for bottle 9 L.
335CBID*PL002	Cleaning head Alumasc for bottle 9 L.
335CBID*PL003	Cleaning head Grundy for bottle 9 L.
335CBID*PL004	Cleaning head UEC for bottle 9 L.
335CBID*PL005	Cleaning head Keykeg for bottle 9 L.
335CBID*PL006	Cleaning head "D" for bottle 9 L.

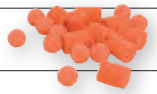

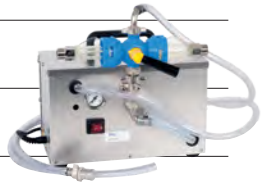

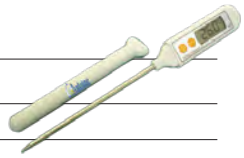

SERVICES

CLEANING & COUPLING HEADS

Model	Description
338C000*00100	Alumasc head, without valve, tap and nipple
335C000*00100	Sankey head, without valve, tap and nipple
335C006*00000	Keykeg head with decompression valve, without J.G.
338C000*00080	Alumasc head with stop valve and integrated JG 3/8
335C000*00080	Sankey head with stop valve and integrated JG 3/8
335C006*00001	Keykeg head with decompression valve with J.G.
338C000*JO1000	Set of gaskets for Alumasc head
335C000*JO1000	Set of gaskets for Sankey head
346C004*00001	Kit of cleaning head Alumasc
346C003*00001	Kit of cleaning head Sankey
346C005*00000	Kit of cleaning head Keykeg

Sankey

Alumasc

Grundy

Keykeg

339C000*00101	Angle valves for flow head

END OF KEG DETECTOR & ACCESSORIES

Save and avoid infections

Référence	Description
789C000*00002	Coolbox for end of kegs detector

- Dimensions (LxDxH) : 670x210x500 mm
- 1 cooling coil 8/9
- 1 SS plate to mount end of kegs detectors
- Finition : skinplate

- Reversible doors
- 1 hole for pyhton line of Ø 85 mm
- 5 holes for beer lines of Ø 50mm
- 20 screws M4 to mount detectors

Réf: Q1825

Réf: Q1710

Q1825	End of keg detector ecoflow PVC
Q1710	End of keg detector CELLARBUOY (electric)

* End of keg detectors not included

NON-CONTRACTUAL PHOTOS

PRESSURE REGULATORS

Model	Description
	Premium regulator - with high and low pressure manometer
301	1 exit
302	2 exits
303	3 exits
306	2 exits
305	**Intermediate regulator** - With manometer 1 exit

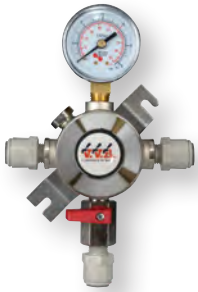

302C00*01500	**Double level regulator 1,5 Bar - 1 exit**

Pressure gallery
With premium regulator fixed on gallery, with high pressure cable equipped with:

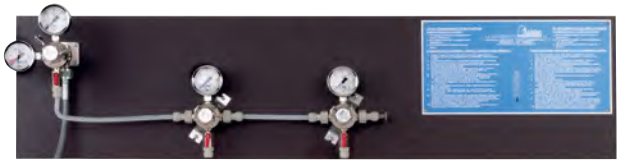

319	2-way distributor
320	3-way distributor
321	2 intermediate regulators 1 exit
322	1 intermediate regulator 1 exit 1 intermediate regulator 2 exits
324	3 intermediate regulators 1 exit
328	4 intermediate regulators 1 exit
329	5 intermediate regulators 1 exit

SAFARI

	SAFARI 20 SUPER	SAFARI 50 HYPER
	491C100*00000 491C100*00100	492C100*00000
Taps	1-2	2
Compressor HP - Power	1/4 432 W	1/3 579 W
Ice bank	7 kg	35 kg
Water tank	17 L	50 L
Agitator	Yes	Yes
Dimensions (WxDxH)	520x370x410 mm	732x427x490 mm
Weight	32 kg	43 kg
Performance L/H	97	197
Kit CO2	Yes	Yes

Not included : coupling head
Structure for Safari : R495

Super

Hyper

Available space inside
WxDxH : 480 x 520 x 930 mm

NON-CONTRACTUAL PHOTOS

DRY COOLER

DESIGN & PERFORMANCE

DRY 40 - 1 TAP

DRY 70 - 1 TAP

DRY 155 - 2 TAPS

Transport handles

with flow regulator

front thermostat

with air compressor
* for one-way keg
with pressure bag

Ref	Coils	Compressor	Performance	Dim. (WxDxH)	Weight	Watts
494C010*00040	1 x 28 M	1/5 HP	20 L/H	225x330x425 mm	26 kg	540 W
494C010*00070	1 x 28 M	1/3 HP	35 L/H	245x340x440 mm	29 kg	890 W
494C020*00155	2 x 26 M	3/4 HP	60 L/H	265x380x495 mm	41 kg	1550 W

Not included : coupling heads

TIPTAP

	TIP TAP
	R 404C000*00000
Taps	1 - 2
Compressor HP	1/4 HP
Ice bank	6 kg
Water tank	20 L
Agitator	2 M
Dimensions (WxDxH)	680x450x290 mm
Weight	23 kg
Performance	50 L/H

1-2 t

Available space inside
WxDxH : 650x 420x800 mm

EVENT - COOLER

Built-in co_2 kit
Not included : Coupling heads

60L Upon request per 24 PC

	1/2 Hp 90L	1 Hp 90L
	499C600*00000	499C800*00000
Dimensions (WxDxH)	535x525x1476 mm	545x525x1551 mm
Taps	2	2
Weight	79 kg	80 kg
Compressor	3/4 HP - PK	1 HP - PK
Performance (L/H)	235 L	315 L
Power	230 V / 50 Hz	230 V / 50 Hz
Performance HP (0°)	540 W	1050 W
Type of gas	R290	R290
Thermostat	Mec. -2°C/+10°C	Mec. -2°C/+10°C
Icebank	45 kg	45 kg
Watertank	90L	90L
Drainer valve	Yes	Yes

NON-CONTRACTUAL PHOTOS

BREUGHEL COMPACT

	BREUGHEL 400 COMPACT
	R 496C01*00200
Taps	2
Compressor HP	1
Icebank	45 kg
Watertank	90 L
Dimensions (WxDxH)	530 x 680 x 1110 mm
Weight	73 kg
Performance	200 L/H

Built-in co_2 kit
Not included : Coupling heads

Easy to transport
Reduced height 1110 mm !

BREUGHEL

	BREUGHEL
	R 497C000*00000 - 498C000*00000
DOUBLE EVAPORATOR	
Taps	2 - 3
Compressor HP	1
Icebank	45 kg
Watertank	90 L
Dimensions (WxDxH)	620 x 675 x 1550 mm
Weight	78 kg
Performance	200 L/H

Built-in co_2 kit
Not included : Coupling heads

ROLL BAR G88

1 - 3 taps

Description
R500C000*00000
Dimensions : 865 x 530 x 1500 mm (WxDxH)
1 Banco 1/2 HP 90 L
2 coils + agitator 2500 t/m
1 drainer half-lined 800 x 500 mm 2 holes
2 USA single polished stainless steel
4 Wheels Ø 125 mm (2 with brakes)
With holes for parasol
Removable panels

Description
R500C000*00100
Dimensions : 865 x 530 x 1500 mm (WxDxH)
1 Sink 800 x 500 mm
2 sinks in the center + accessories

Description
R500C000*00200
Dimensions : 865 x 530 x 1000 mm (WxDxH)
Removable panels
1 drainer lined 800 x 500 mm for glasses
Accessories

NON-CONTRACTUAL PHOTOS

ROLL BAR GT108 «EXTENSO»

1 - 3 TAPS

Option
Service tablet

Description
R501C000*00000
Dimensions : 1080 x 530 x 1500 mm (WxDxH)
2 pliable tablets 460 x 530 mm
Total length when opened: 2000 mm
Total length when closed: 1150 mm
1 Banco 1/2 HP 90 L
2 coils 25m 7/8 + agitator 2500 RPM
1 drainer half-lined 80 x 50 cm 2 holes
2 USA 1 tap polished stainless steel (Not illuminated)
4 wheels Ø 125 mm (2 with brakes)
With holes for parasol and removable panels

ROLL BAR GT160 ALL-IN-ONE

1 - 3 TAPS

Option
Service tablet

Description
R501C000*00320
Dimensions : 1600x530x1500 mm (WxDxH)
2 pliable tablets 460x530 mm
Total length when opened: 2480 mm
1 drainer - sink 1500x500x50 mm
2 sinks, 2 funnels, 1 cold water tap
2 USA polished stainless steel (Not illuminated)
1 banco 1/2 HP 90 L
2 coils of 25 m 7/8 + agitator 2500 RPM
4 wheels Ø 125 mm (2 with brakes)
With holes for parasol and removable panels
Option: Kit CO2 and coupling heads

ROLL BAR GT XL

1 - 4 TAPS

Option
Service tablet

Description
501C160*0002
Dimensions : 1600 x 630 x 1500 mm (WxDxH)
Total length with tablets: 2480 mm

Equipped with:

- 2 pliable tablets 460 x 530 mm
- 1 banco 3/4 HP 144L. Extra Large / Icebank 80 kg
- 2 coils + agitator 2500 T & drain tap
- 1 drainer 1500 x 600 mm, 2 holes
- 2 towers USA 1 tap - chromed
- 4 wheels Ø 125 - 2 with brakes
- With holes for parasol and removable panels

Alternatively:

501C160*00003
with 3 towers USA 1 tap - chromed
501C160*00004
with 4 towers USA 1 tap - chromed

https://youtu.be/blSQKOPeNNk

SPEEDTAP

Description
REF : 504C000*0000
Dimensions (WxDxH) : 1500x620x1337 mm
4 Alpha II taps
Tower : Adjustable height and angle
Compressor : 3/4 HP
Power : 230V / 50Hz - 5,10 A
Cooling capacity @ 0°C : 2714 W
Power consumption @ 0°C : 1050 W
Type of gas : R-290
Thermostat : -2C° à + 10C°
Icebank max :85kg
4 Coils of 25 m
4 big wheels with brake
Waterbath : 144 liters
Built-in co2 regulator
Drain valve included
1 Set of 3 grey panels
3 aluminium trays for 16 glasses included

FOLDING COUNTER

Description
502C000*001001 - Stainless steel frame: 1270x535x1000mm (LxDxH)
502C000*00000 - with 1 drainer 1200x500 mm (frame included)
502C000*00010 - with 1 drainer with 2 sinks 1200x500 mm (frame included)

SERVICE COUNTER

Description
502C100*00001
1 Framework in stainless steel 1500 x 300 x 1100 mm (LxDxH)

MADE ON REQUEST

NON-CONTRACTUAL PHOTOS

WINE CELLAR

	Description
	800C200*00103
Color :	Black
Specification :	1 tinted glass door
Dimension (LxdxH) :	503x567x775 mm
Volume :	80L
Weight :	37kg
Number of bottles :	18
Température C°:	2-10
Power output :	1/5 HP - 271W
Shelves :	3
Refrigerant gas :	R290

	Description
	800C100*00095
Color :	Black
Specification :	1 porte vitrée / 1 glazen deur
Dimension (LxDxH) :	595x640x1840 mm
Volume :	350L
Weight :	83kg
Number of bottles :	118
Temperature C°	6-18
Power output :	220-240/50 V/Hz 0.86Wh/24h
Shelves	8
Refrigerant gas :	R290

ICE CUBES - MACHINES with built-in storage space

HOSHIZAKI

	Ref.	Description
	R801C000*00001	Model IM-30 CLE Maximum production in 24 hours: 28 KG Storage capacity: 11 KG Length: 398 mm Width: 495 + 6 mm Height: 695 + 10 mm Capacity: 250 W/H Pure and compact ice Lasts longer Stainless steel housing for hygiene and a longer lifetime.
	R801C000*00002	Model IM-45 CLE Maximum production in 24 hours: 45 KG Storage capacity: 15 KG Length: 633 mm Width: 506 + 6 mm Height: 690 + 10 mm Capacity: 320 W/H Pure and compact ice Lasts longer Stainless steel housing for hygiene and a longer lifetime.
	R801C000*00003	Model IM-65 LE Maximum production in 24 hours: 64 KG Storage capacity: 26 KG Length: 633 mm Width: 506 + 6 mm Height: 850 + 10 mm Capacity: 420 W/H Pure and compact ice Lasts longer Stainless steel housing for hygiene and a longer lifetime.
	R801C000*00005	Model IM-100 CLE Maximal production in 24 hours: 97 KG Storage capacity: 50 KG Length: 704 mm Width: 506 + 6 mm Height: 1200 + 10 mm Capacity: 610 W/H Pure and compact ice Lasts longer Stainless steel housing for hygiene and a longer lifetime.

NON-CONTRACTUAL PHOTOS

Terms and conditions of sale

GENERAL

1. Unless otherwise agreed in writing, our prices are understood to be net of VAT, without any discount, rebate or deduction.
2. Transactions negotiated by our representatives are only considered valid and final after acceptance and confirmation by us.
3. Any claims concerning invoices or relating to goods shall only be entertained when submitted in writing within one week.
4. All goods remain our property until full payment of the invoice.
5. SA Antoine also reserves the right to change, without prior notice, the characteristics and equipment for the products presented.

PAYMENT

6. Our invoices are payable immediately in cash.
7. Other invoices are payable 30 days end of the month from the invoice date.
8. Failure to pay any invoice on the due date shall, without any requirement for formal written notice, result in a lump sum penalty of 10 % being automatically added to the amount of the outstanding invoice in compensation for the damages caused by the purchaser's failure to perform. Such amount shall be a minimum of EUR 25, without prejudice to any right of the debtor to request a grace period under the conditions set out in article 1244 of the Civil Code.
9. Interest of 10 % per annum shall be automatically due when payment is not made on the due date indicated, without there being any requirement for formal notice.

JURISDICTION

10. The Courts of Brussels and, where appropriate, the Justice of the Peace of the 2nd subdistrict of Brussels, shall have jurisdiction in the event of any dispute.

CONTRIBUTION TO ADMINISTRATION FEES

11. For the drawing up of invoices for amounts of EUR 12.50 or less, a sum of EUR 2.50 shall be charged as a contribution towards administration fees.

All our products are covered by a warranty, subject to the following conditions:

WARRANTY

I) Plumbing and refrigeration equipment
Twelve (12) months for manufacturing defects resulting in abnormal wear, except where the product is used for a purpose for which it was not intended or due to a lack of maintenance. Transport costs are not included in the warranty.

II) Refrigeration equipment
One (1) year warranty: parts: in exchange for the defective part in our stores. The client remains responsible for labour – thermostat – fan – compressor – mixer – pump.
Twelve (12) months for door seals, except in case of improper use or lack of maintenance.

The customer is responsible for carrying out the works indicated in the instruction manual supplied with the appliance. Works, in this context, is understood to mean all reasonable maintenance of the refrigeration appliance.

The customer undertakes not to modify (or to have modified) or to add anything to the appliance without the prior, written authorisation of SA Antoine.

WARRANTY EXCLUSIONS

Defects caused by a lack of maintenance
Defects caused by improper use
Defects caused by external factors
Cleaning of the condenser
Replacement of light bulbs or door seals
Drainage hole clogged by condensation
Thermostat adjustment

SA Antoine rejects any liability for damages, loss of turnover or consequential damages associated with the improper functioning of the appliance covered by this warranty. This rejection of liability does not, however, apply in the case of damages which are the direct consequence of intentional conduct or gross negligence on the part of SA Antoine.

HEADQUARTERS

BRUSSELS

Rue de la Bienvenue, 7-9 • 1070 Brussels

Antoine: Tél +32 (2) 523 94 30 • Fax +32 (2) 520 06 18

info@antoinebelgium.be • www.antoine-belgium.com
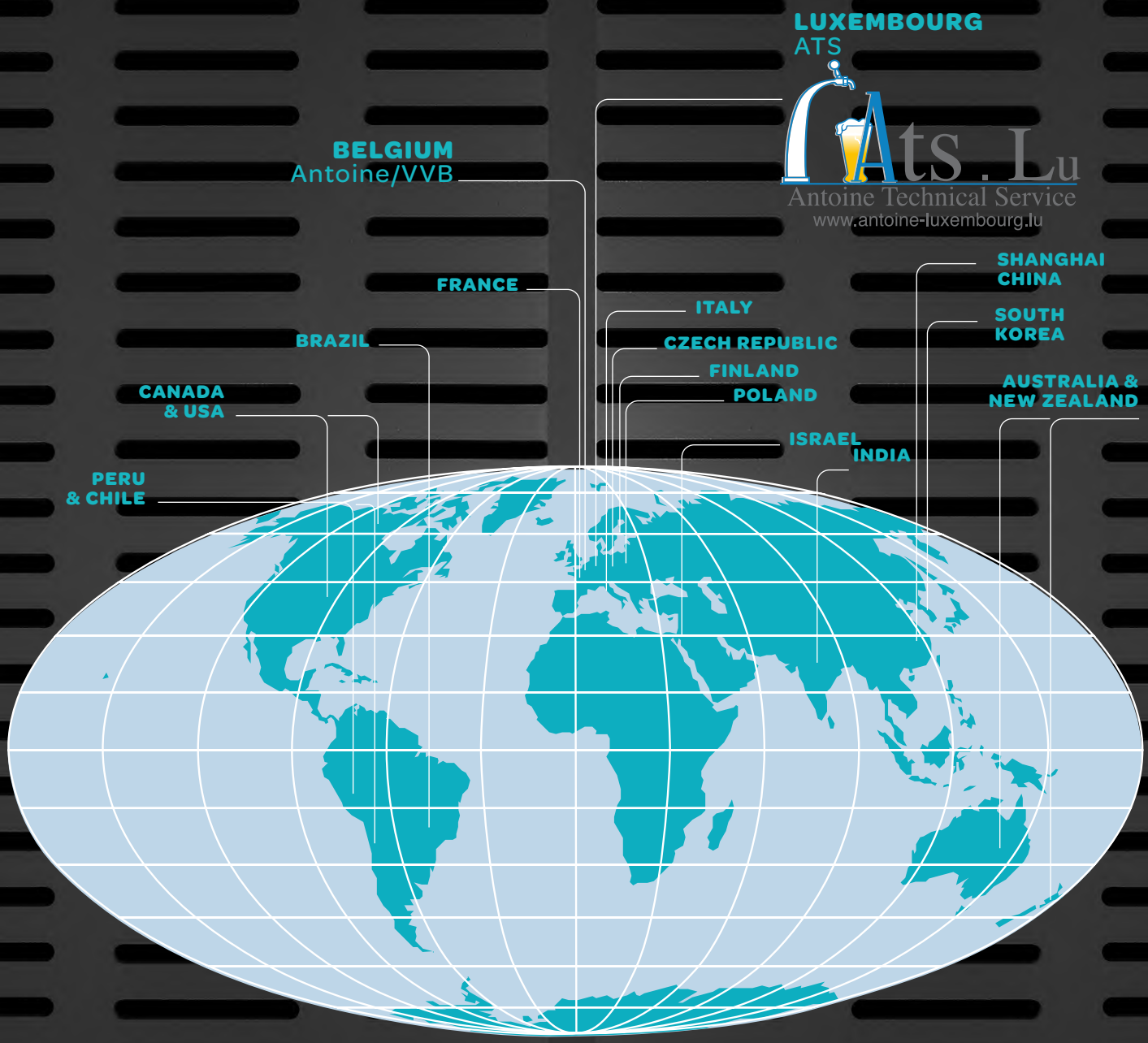
SERVICE POINTS WORLDWIDE